HEAT-N-GLO
No one builds a better fire

Models:
8000TRD
8000TRD-IPI

Installers Guide

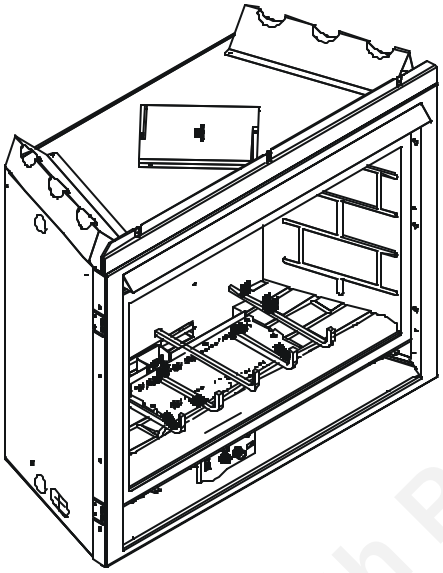

GAS-FIRED
c UL us
LISTED

Underwriters
Laboratories Listed

WARNING: IF THE INFORMATION IN THESE INSTRUCTIONS IS NOT FOLLOWED EXACTLY, A FIRE OR EXPLOSION MAY RESULT CAUSING PROPERTY DAMAGE, PERSONAL INJURY, OR DEATH.

- Do not store or use gasoline or other flammable vapors and liquids in the vicinity of this or any other appliance.
- **What to do if you smell gas**
  - Do not try to light any appliance.
  - Do not touch any electrical switch.
  - Do not use any phone in your building.
  - Immediately call your gas supplier from a neighbor's phone. Follow the gas supplier's instructions.
  - If you cannot reach your gas supplier, call the fire department.
- Installation and service must be performed by a qualified installer, service agency, or the gas supplier.

READ THIS MANUAL BEFORE INSTALLING OR OPERATING THIS APPLIANCE. THIS *INSTALLERS GUIDE* MUST BE LEFT WITH APPLIANCE FOR FUTURE REFERENCE.

WARNING: IMPROPER INSTALLATION, ADJUSTMENT, ALTERATION, SERVICE OR MAINTENANCE CAN CAUSE INJURY OR PROPERTY DAMAGE. REFER TO THIS MANUAL. FOR ASSISTANCE OR ADDITIONAL INFORMATION CONSULT A QUALIFIED INSTALLER, SERVICE AGENCY, OR THE GAS SUPPLIER.

1. This appliance may be installed in an aftermarket, permanently located, manufactured (mobile) home, where not prohibited by local codes.
2. This appliance is only for use with the type of gas indicated on the rating plate. This appliance is not convertible for use with other gases, unless a certified kit is used.

Printed in U.S.A. Copyright 2004,

Heat-N-Glo, a brand of Hearth & Home Technologies Inc.
20802 Kensington Boulevard, Lakeville, MN 55044

Please contact your Heat-N-Glo dealer for any questions or concerns. For the number of your nearest Heat-N-Glo dealer, please call 1-888-427-3973.

This product is covered by one or more of the following patents: (United States) 4,112,913; 4,408,594; 4,422,426; 4,424,792; 4,520,791; 4,793,322; 4,852,548; 4,875,464; 5,000,162; 5,016,609; 5,076,254 5,191,877; 5,218,953; 5,328,356; 5,429,495; 5,452,708; 5,542,407; 5,613,487; (Australia) 543790; 586383; (Canada) 1,123,296; 1,297,746; 2,195,264; (Mexico) 97-0457; (New Zealand) 200265; or other U.S. and foreign patents pending.

380-900 O 1/04

Mountain View Hearth Products - manuals.stoveparts-unlimited.com
Downloaded from www.Manualslib.com manuals search engine

SAFETY AND WARNING INFORMATION

READ and ***UNDERSTAND*** all instructions carefully before starting the installation. ***FAILURE TO FOLLOW*** these installation instructions may result in a possible fire hazard and will void the warranty.

Prior to the first firing of the fireplace, ***READ*** the Using Your Fireplace section of the *Owners Guide*.

DO NOT USE this appliance if any part has been under water. Immediately ***CALL*** a qualified service technician to inspect the unit and to replace any part of the control system and any gas control which has been under water.

THIS UNIT IS NOT FOR USE WITH SOLID FUEL.

Installation and repair should be ***PERFORMED*** by a qualified service person. The appliance and venting system should be ***INSPECTED*** before initial use and at least annually by a professional service person. More frequent cleaning may be required due to excessive lint from carpeting, bedding material, etc. It is ***IMPERATIVE*** that the unit's control compartment, burners, and circulating air passageways ***BE KEPT CLEAN*** to provide for adequate combustion and ventilation air.

Always ***KEEP*** the appliance clear and free from combustible materials, gasoline, and other flammable vapors and liquids.

NEVER OBSTRUCT the flow of combustion and ventilation air. Keep the front of the appliance ***CLEAR*** of all obstacles and materials for servicing and proper operations.

Due to the high temperature, the appliance should be ***LOCATED*** out of traffic areas and away from furniture and draperies. Clothing or flammable material ***SHOULD NOT BE PLACED*** on or near the appliance.

Children and adults should be **ALERTED** to the hazards of high surface temperature and should **STAY AWAY** to avoid burns or clothing ignition. Young children should be **CAREFULLY SUPERVISED** when they are in the same room as the appliance.

These units ***MUST*** use one of the vent systems described in the Installing the Fireplace section of the *Installers Guide*. ***NO OTHER*** vent systems or components ***MAY BE USED.***

This gas fireplace and vent assembly ***MUST*** be vented directly to the outside and ***MUST NEVER*** be attached to a chimney serving a separate solid fuel burning appliance. Each gas appliance ***MUST USE*** a separate vent system. Common vent systems are ***PROHIBITED***.

INSPECT the external vent cap on a regular basis to make sure that no debris is interfering with the air flow.

The glass door assembly ***MUST*** be in place and sealed, and the trim door assembly ***MUST*** be in place on the fireplace before the unit can be placed into safe operation.

DO NOT OPERATE this appliance with the glass door removed, cracked, or broken. Replacement of the glass door should be performed by a licensed or qualified service person. ***DO NOT*** strike or slam the glass door.

The glass door assembly ***SHALL ONLY*** be replaced as a complete unit, as supplied by the gas fireplace manufacturer. ***NO SUBSTITUTE*** material may be used.

DO NOT USE abrasive cleaners on the glass door assembly. ***DO NOT ATTEMPT*** to clean the glass door when it is hot.

Turn off the gas before servicing this appliance. It is recommended that a qualified service technician perform an appliance check-up at the beginning of each heating season.

Any safety screen or guard removed for servicing must be replaced before operating this appliance.

DO NOT place furniture or any other combustible household objects within 36 inches of the fireplace front.

Mountain View Hearth Products - manuals.stoveparts-unlimited.com
Downloaded from www.Manualslib.com manuals search engine

TABLE OF CONTENTS

Safety and Warning Information 2

◆ **Service Parts Lists 4**

Section 1: Approvals and Codes 8
Appliance Certification 8
Installation Codes 8
High Altitude Installations 8

Section 2: Getting Started 9
Introducing the Heat-N-Glo Gas Fireplaces 9
Pre-installation Preparation 9

Section 3: Installing the Fireplace 11
Constructing the Fireplace Chase 11
Step 1 Locating the Fireplace 11
Step 2 Framing the Fireplace..... 12
Step 3 Installing the Vent System 14
A. Vent System Approvals 14
B. Installing Vent Components 22
C. Vent Termination..... 25
Step 4 Positioning, Leveling, and Securing the Fireplace..... 27
Step 5 The Gas Control Systems 28
◆ Step 6 The Gas Supply Line 29
Step 7 Gas Pressure Requirements 29
◆ Step 8 Wiring the Fireplace..... 30
Step 9 Finishing 32
Step 10 Installing Trim, Logs, and Ember Material..... 33
Installing the Trim 33
Positioning the Logs 33
Shutter Settings 33
Placing the Ember Material..... 33
Glass Specifications 34
Step 11 Before Lighting the Fireplace..... 34
Step 12 Lighting the Fireplace..... 34
After the Installation 34

Section 4: Maintaining and Servicing Your Fireplace 35

◆ = Contains updated information.

Mountain View Hearth Products - manuals.stoveparts-unlimited.com
Downloaded from www.Manualslib.com manuals search engine

1 Approvals and Codes

Appliance Certification

The Heat-N-Glo fireplace models discussed in this *Installers Guide* have been tested to certification standards and listed by the applicable laboratories.

Certification
MODEL: 8000TRD **LABORATORY:** Underwriters Laboratories **TYPE:** Direct Vent Gas Fireplace **STANDARD:** ANSI Z21.50b-2000•CSA2.22b-2000•UL307B

Installation Codes

The fireplace installation must conform to local codes. Before installing the fireplace, consult the local building code agency to ensure that you are in compliance with all applicable codes, including permits and inspections.

In the absence of local codes, the fireplace installation must conform to the National Fuel Gas Code ANSI Z223.1 (in the United States) or the CAN/CGA-B149 Installation Codes (in Canada). The appliance must be electrically grounded in accordance with local codes or, in the absence of local codes with the National Electric Code ANSI/NFPA No. 70 (in the United States), or to the CSA C22.1 Canadian Electric Code (in Canada).

These models may be installed in a bedroom or bed-sitting room in the U.S.A. and Canada.

High Altitude Installations

U.L. Listed gas appliances are tested and approved without requiring changes for elevations from 0 to 2,000 feet in the U. S. A. and in Canada.

When installing this appliance at an elevation above 2,000 feet, it may be necessary to decrease the input rating by changing the existing burner orifice to a smaller size. Input rate should be reduced by 4% for each 1000 feet above a 2000 foot elevation in the U.S.A. or 10% for elevations between 2000 and 4500 feet in Canada. If the heating value of the gas has been reduced, these rules do not apply. To identify the proper orifice size, check with the local gas utility.

If installing this appliance at an elevation above 4,500 feet (in Canada), check with local authorities.

Heat-N-Glo Quality Systems registered by SGS ICS

Mountain View Hearth Products - manuals.stoveparts-unlimited.com
Downloaded from www.Manualslib.com manuals search engine

2 Getting Started

Introducing the Heat-N-Glo Gas Fireplaces

Heat-N-Glo direct vent gas fireplaces are designed to operate with all combustion air siphoned from outside of the building and all exhaust gases expelled to the outside.

The information contained in this *Installers Guide*, unless noted otherwise, applies to all models and gas control systems. Gas fireplace diagrams, including the dimensions, are shown in this section.

Pre-install Preparation

This gas fireplace and its components are tested and safe when installed in accordance with this *Installers Guide*. Report to your dealer any parts damaged in shipment, particularly the condition of the glass. **Do not install any unit with damaged, incomplete, or substitute parts.**

The vent system components are shipped in separate packages. The gas logs may be packaged separately and must be field installed.

Read all of the instructions before starting the installation. Follow these instructions carefully during the installation to ensure maximum safety and benefit. Failure to follow these instructions will void the owner's warranty and may present a fire hazard.

The Heat-N-Glo Warranty will be voided by, and Heat-N-Glo disclaims any responsibility for, the following actions:

- Installation of any damaged fireplace or vent system component.
- Modification of the fireplace or direct vent system.
- Installation other than as instructed by Heat-N-Glo.
- Improper positioning of the gas logs or the glass door.
- Installation and/or use of any component part not manufactured and approved by Heat-N-Glo, not withstanding any independent testing laboratory or other party approval of such component part or accessory.

ANY SUCH ACTION MAY POSSIBLY CAUSE A FIRE HAZARD.

When planning a fireplace installation, it's necessary to determine:

- Where the unit is to be installed.
- The vent system configuration to be used.
- Gas supply piping.
- Electrical wiring.
- Framing and finishing details.
- Whether optional accessories—devices such as a fan, wall switch, or remote control—are desired.

If the fireplace is to be installed on carpeting or tile, or on any combustible material other than wood flooring, the fireplace should be installed on a metal or wood panel that extends the full width and depth of the fireplace.

Mountain View Hearth Products
manuals.stove-parts-unlimited.com

Mountain View Hearth Products manuals.stove-parts-unlimited.com
Downloaded from www.Manualslib.com manuals search engine

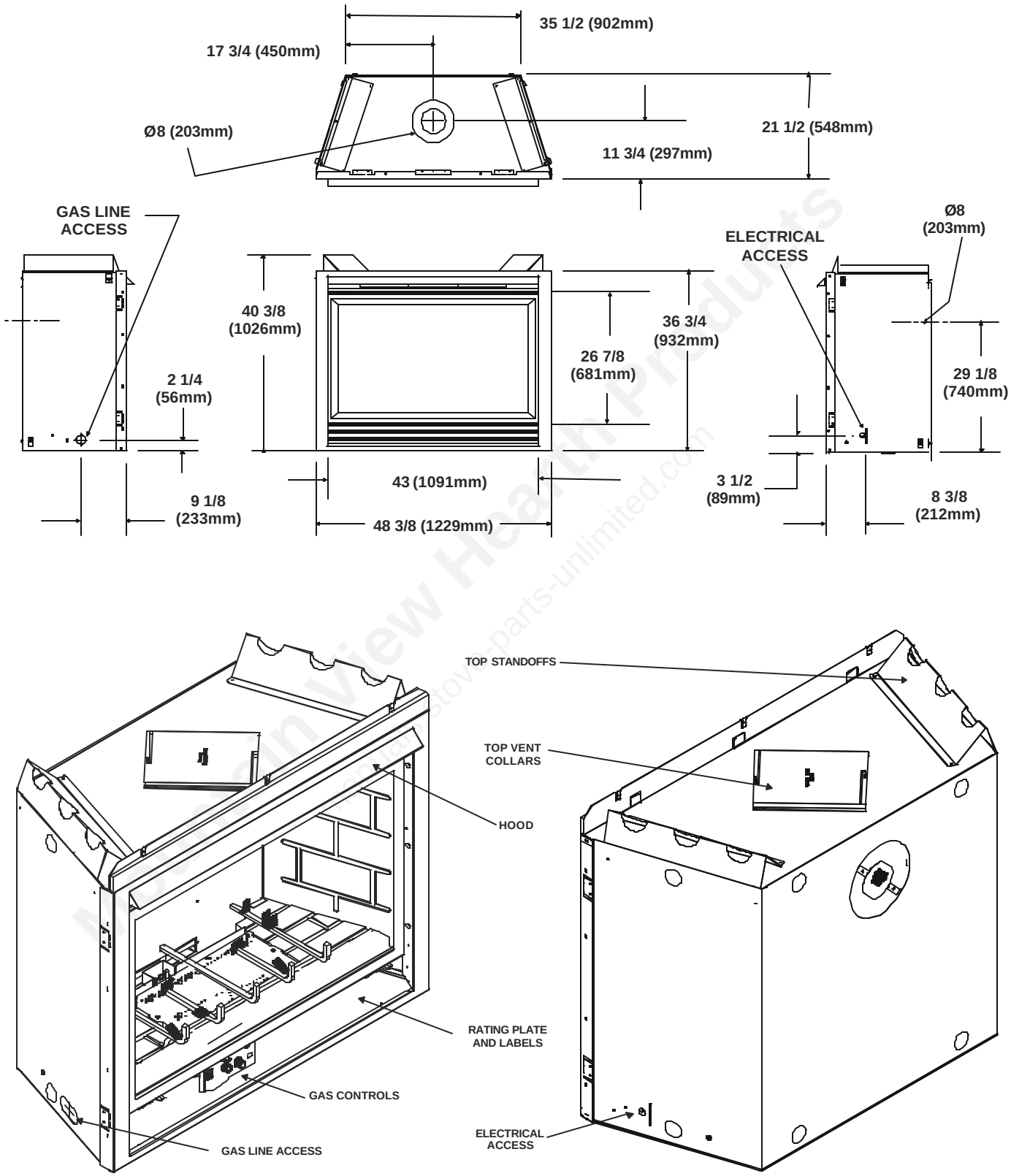

Figure 1. Diagram of the 8000TRD

Mountain View Hearth Products - manuals.stoveparts-unlimited.com
Downloaded from www.Manualslib.com manuals search engine

3 Installing the Fireplace

Constructing the Fireplace Chase

A chase is a vertical box-like structure built to enclose the gas fireplace and/or its vent system. Vertical vents that run on the outside of a building may be, but are not required to be, installed inside a chase.

CAUTION: *TREATMENT OF FIRESTOP SPACERS AND CONSTRUCTION OF THE CHASE MAY VARY WITH THE TYPE OF BUILDING. THESE INSTRUCTIONS ARE NOT SUBSTITUTES FOR THE REQUIREMENTS OF LOCAL BUILDING CODES. THEREFORE, YOUR LOCAL BUILDING CODES* ***MUST*** *BE CHECKED TO DETERMINE THE REQUIREMENTS FOR THESE STEPS.*

Factory-built fireplace chases should be constructed in the manner of all outside walls of the home to prevent cold air drafting problems. The chase should not break the outside building envelope in any manner.

This means that the walls, ceiling, base plate and cantilever floor of the chase should be insulated. Vapor and air infiltration barriers should be installed in the chase as per regional codes for the rest of the home. Additionally, Heat-N-Glo recommends that the inside surfaces be sheetrocked and taped for maximum air tightness.

To further prevent drafts, the firestops should be caulked to seal gaps. Gas line holes and other openings should be caulked or stuffed with insulation. If the unit is being installed on a cement slab, we recommend that a layer of plywood be placed underneath to prevent conducting cold up into the room.

THE CHASE SHOULD BE CONSTRUCTED SO THAT ALL CLEARANCES TO THE FIREPLACE ARE MAINTAINED AS SPECIFIED WITHIN THIS INSTALLERS GUIDE.

Step 1. Locating the Fireplace

The following diagram shows space and clearance requirements for locating a fireplace within a room.

Clearance Requirements

The top, back, and sides of the fireplace are defined by stand-offs. The minimum clearance to a perpendicular wall extending past the face of the fireplace is one inch (25 mm). The back of the fireplace may be recessed 21 1/2 inches (546 mm) into combustible construction.

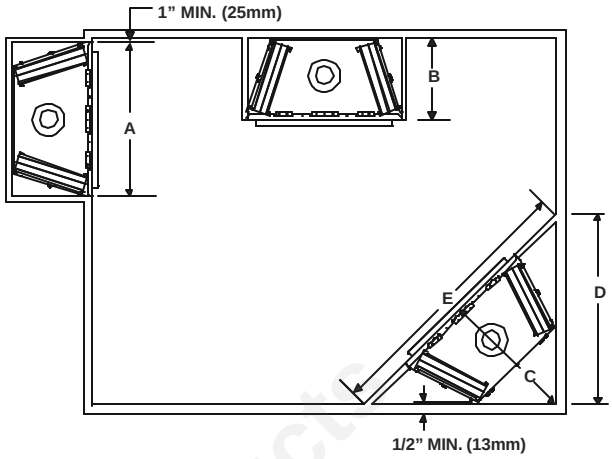

VENTING	A	B	C	D	E
Top	49"	22"	39-1/2"	56"	79"
Rear *	49"	22"	43-1/2"	62"	87"

***NOTE** If venting with (2) 90° elbows off rear of unit the dimensions C, D, and E, will change.

Figure 2. Fireplace Dimensions, Locations, and Space Requirements

Minimum Clearances from the Fireplace to Combustible Materials

	Inches	mm
Glass Front	36	914
Floor	0	0
Rear	1/2	13
Sides	1/2	13
Top	3 1/2	89
Ceiling**	31	787

* See Figure 3.

** The clearance to the ceiling is measured from the top of the unit, excluding the standoffs (see Figure 38).

The distance from the unit to combustible construction is to be measured from the unit outer wrap surface to the combustible construction, **NOT** from the screw heads that secure the unit together.

Minimum Clearances from the Vent Pipe to Combustible Materials

	Inches	mm
Vertical Sections	1	25
Horizontal Sections		
Top	3	75
Bottom	1	25
Sides	1	25
At Wall Firestops		
Top	3	75
Bottom	1	25
Sides	1	25

For minimum clearances, see the direct vent termination clearance diagrams on pages 26 and 27 in this manual.

Mountain View Hearth Products | manuals.stoveparts-unlimited.com
Downloaded from www.Manualslib.com manuals search engine

Step 2. Framing the Fireplace

Fireplace framing can be built before or after the fireplace is set in place. Framing should be positioned to accommodate wall coverings and fireplace facing material. The diagram below shows framing reference dimensions.

CAUTION: *MEASURE FIREPLACE DIMENSIONS AND VERIFY FRAMING METHODS AND WALL COVERING DETAILS BEFORE FRAMING.*

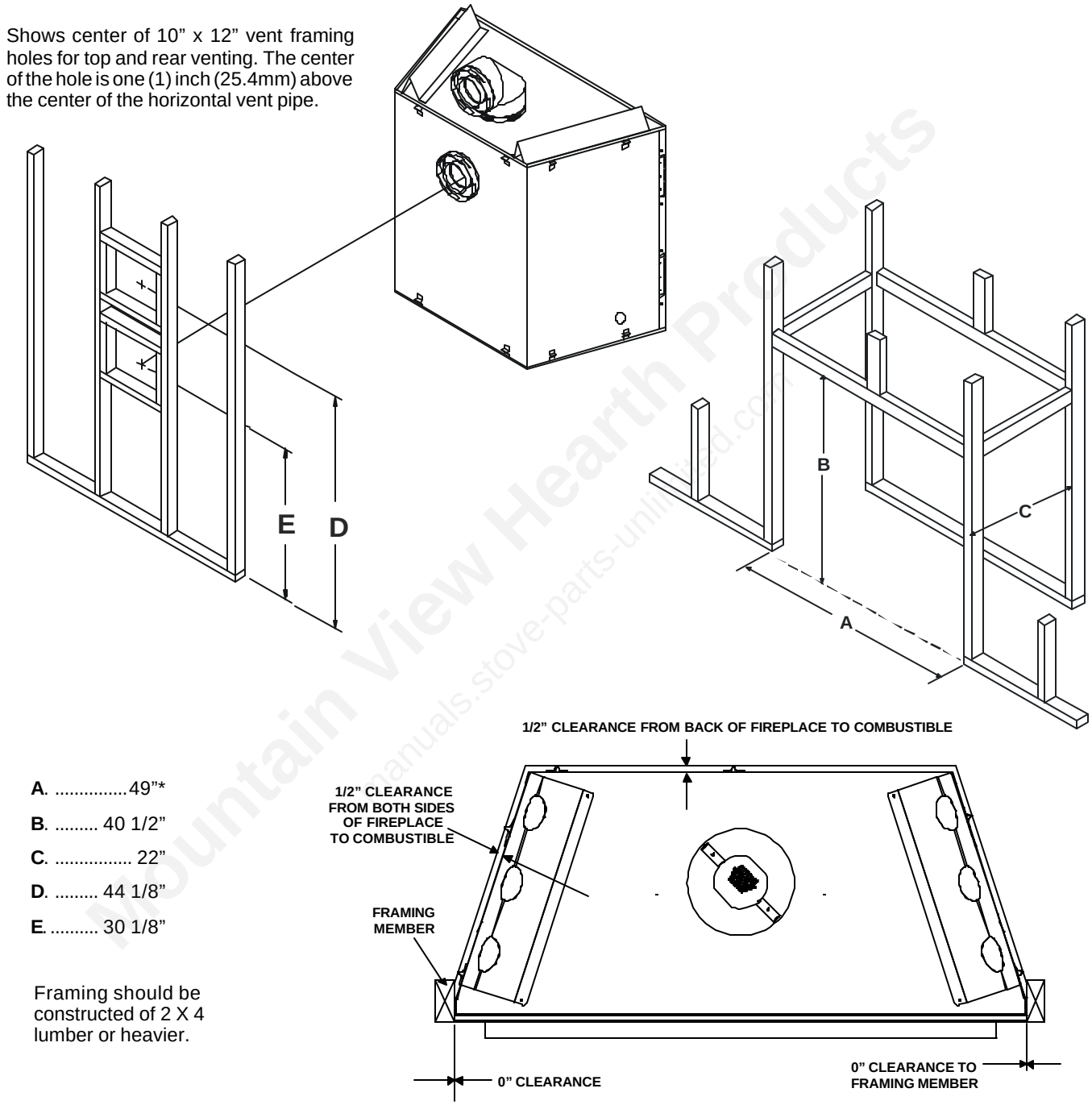

A. .....49”*

B. ..... 40 1/2”

C. ..... 22”

D. ..... 44 1/8”

E. ..... 30 1/8”

Framing should be constructed of 2 X 4 lumber or heavier.

Figure 3. Framing Dimensions

Mountain View Hearth Products
manuals.stove-parts-unlimited.com

Mountain View Hearth Products - manuals.stove-parts-unlimited.com
Downloaded from www.Manualslib.com manuals search engine

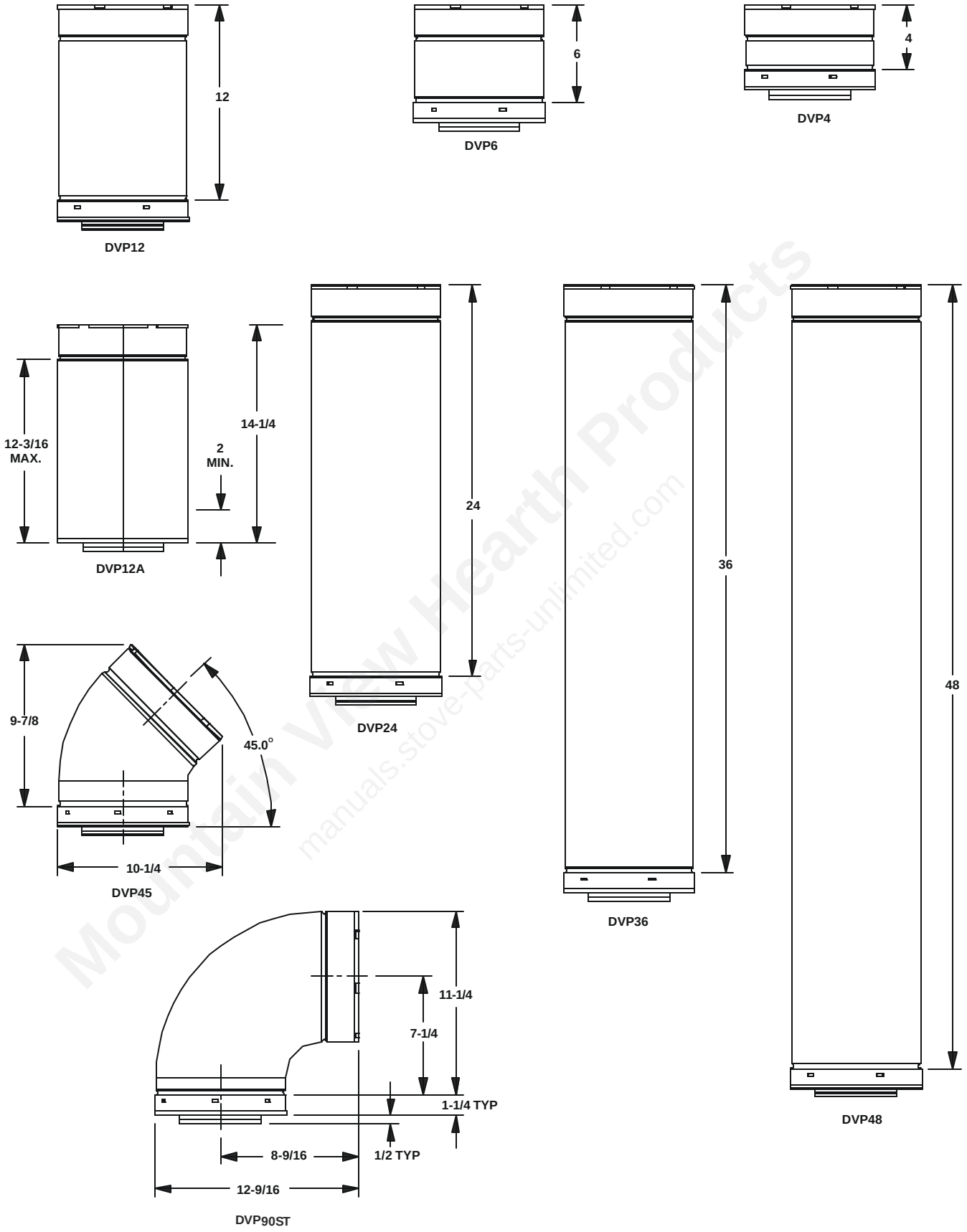

NOTE: PIPES OVERLAP 1-1/4 INCHES AT EACH JOINT.

Figure 4. DVP-Series Direct Vent Component Specifications (5-inch inner pipe / 8-inch outer pipe)

Mountain View Hearth Products | manuals.stove-parts-unlimited.com
Downloaded from www.Manualslib.com manuals search engine

Step 3. Installing the Vent System

A. Vent System Approvals

These models are approved to use DVP-series direct vent pipe components and terminations (see Figures 4 and 5). Approved vent system components are labeled for identification. This pipe is tested and listed as an approved component of the fireplace. The pipe is tested to be run inside an enclosed wall. There is no requirement for inspection openings at each joint within the wall. There is no required pitch for horizontal vent runs. **NO OTHER VENTING SYSTEMS OR COMPONENTS MAY BE USED**.

Detailed installation instructions are included with each vent termination kit and should be used in conjunction with this *Installers Guide*.

The flame and ember appearance may vary based on the type of fuel burned and the venting configuration used.

Identifying Vent Components

The vent systems installed on this gas fireplace may include one, two, or three 90° elbow assemblies. The relationships of vertical rise to horizontal run in vent configurations using 90° elbows **MUST BE** strictly adhered to. The rise to run relationships are shown in the venting drawings and tables. Refer to the diagrams on the next several pages.

NOTE: Two 45° elbows may be used in place of one 90° elbow. Rise to run ratios in the vent system must be followed if 45° elbows are used.

This model has vent starting collars on both the top and the back of the unit. Depending upon the installation, decide which **ONE** set of starting collars will be used to attach the vent system. The starting collar sealing cap must remain on the starting collar **NOT** used.

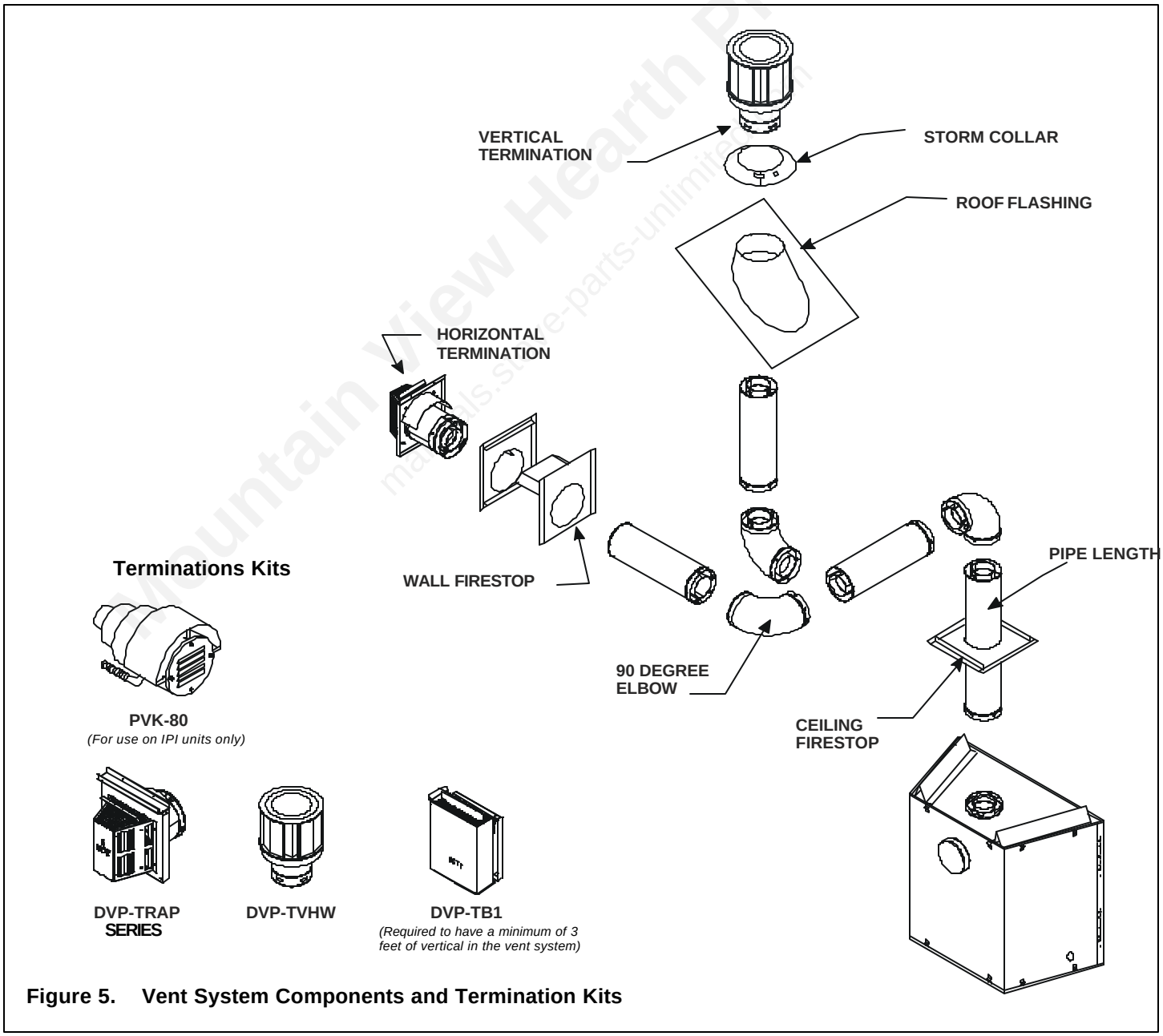

Figure 5. Vent System Components and Termination Kits

Mountain View Hearth Products - manuals.stoveparts-unlimited.com
Downloaded from www.Manualslib.com manuals search engine

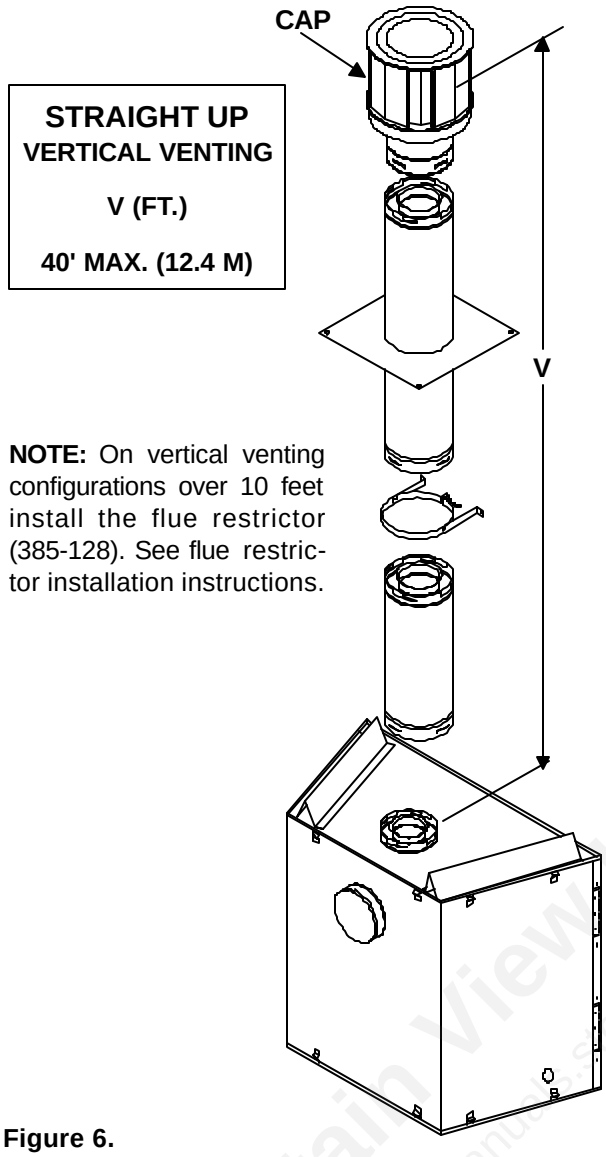

NOTE: On vertical venting configurations over 10 feet install the flue restrictor (385-128). See flue restrictor installation instructions.

Figure 6.
Straight Up Vertical Venting

Flue Restrictor Instructions

1. Remove Exhaust Shield using a 1/4" nut driver by removing the four screws securing it in place (see Figure 7).

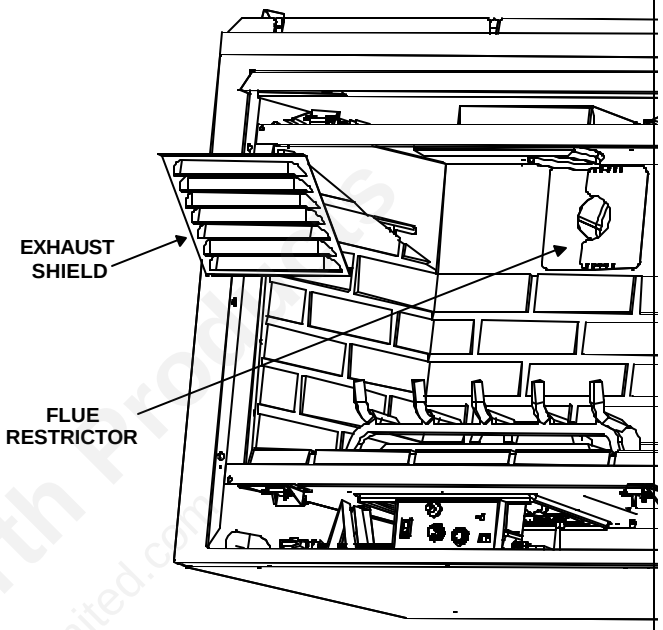

Figure 7

2. Break the Flue Restrictor into two pieces. Do this by bending the part back and forth until it breaks (see Figure 8).

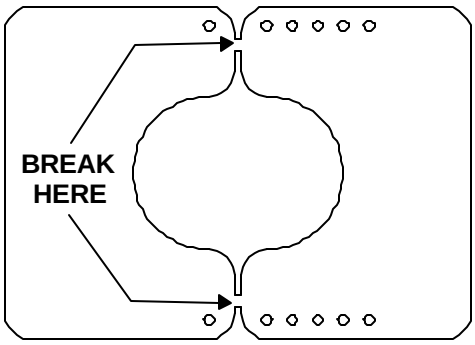

Figure 8. Flue Restrictor

Mountain View Hearth Products
manuals.stoveparts-unlimited.com

Downloaded from www.Manualslib.com manuals search engine
Mountain View Hearth Products - manuals.stoveparts-unlimited.com

3. Match the amount of vertical you have in the system with the chart to find the appropriate position to set the Flue Restrictor (see Figure 9).

- CHART -				
Vertical	**Top Vent NG**	**Top Vent LP**	**Rear Vent NG**	**Rear Vent LP**
4'	1-1	No Restrictor	No Restrictor	No Restrictor
8'	2-2	1-2	1-1	No Restrictor
15'	3-3	3-2	2-2	1-2
20'	3-4	3-3	3-3	2-3
25'	3-4	3-3	3-3	2-3
30'	4-4	3-4	3-4	3-3
35'	4-4	3-4	3-4	3-3
40'	5-4	4-4	4-4	3-4

Figure 9.

4. Center the Flue Restrictor on vent and secure in place by using two self-tapping screws (see Figure 10).

5. Reinstall the Exhaust Shield.

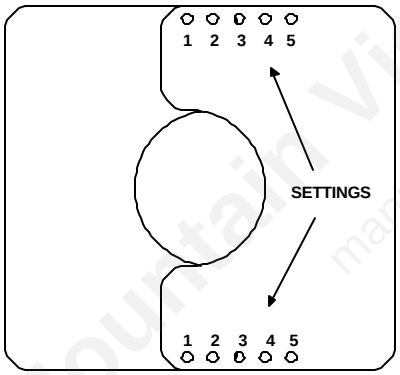

Figure 10

HORIZONTAL VENTING	
Kit No.	**H Max. Run**
DVP-TRAP	24" (610 mm)

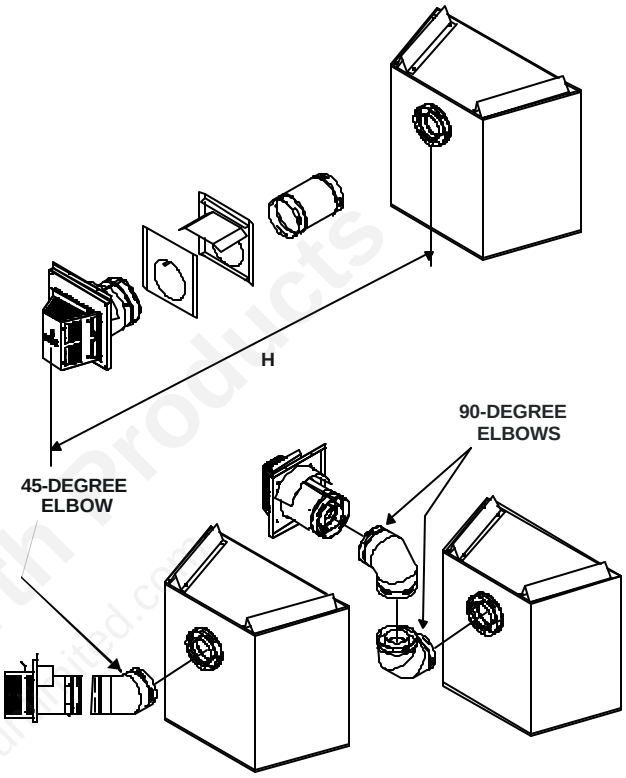

NOTE: This model is tested and approved to use 45° elbows in corner installations. However, 90° elbows will result in better performance.

Figure 11. Corner Installation

Mountain View Hearth Products
manuals.stove-parts-unlimited.com

Mountain View Hearth Products - manuals.stove-parts-unlimited.com
Downloaded from www.Manualslib.com manuals search engine

VENTING WITH ONE (1) 90° ELBOW

V	H
1' MIN. (305mm)	2' MAX. (610mm)
2' MIN. (610mm)	4' MAX. (1.22m)
3' MIN. (914mm)	6' MAX. (1.86m)
4' MIN. (1.22m)	8' MAX. (2.4m)
V+H=40' MAX. (12.4m)	H = 8' MAX. (2.4m)

NOTE: On vertical venting configurations, where the vertical component is over 10 feet, install the flue restrictor included in the manual bag assembly to improve flame appearance.

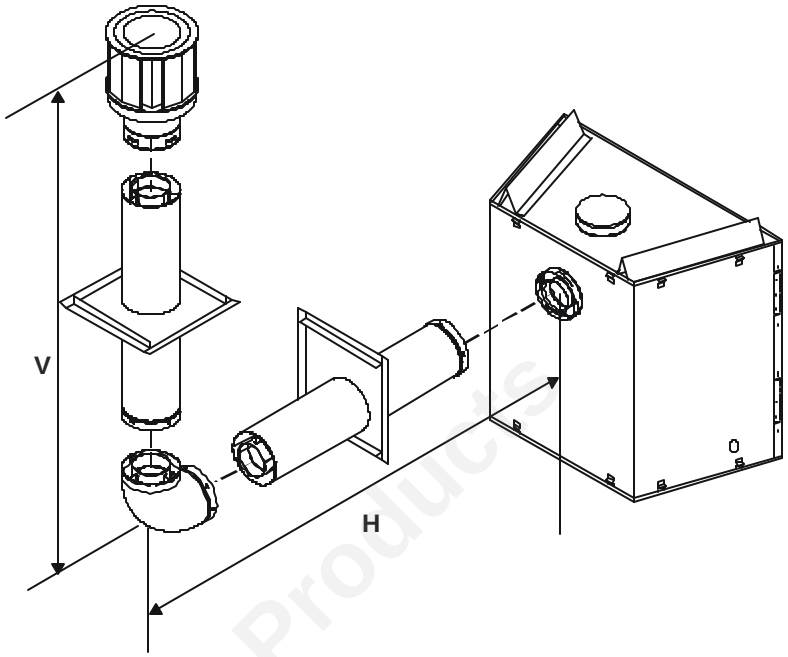

Figure 12. Venting with One 90° Elbow

VENTING WITH ONE (1) 90° ELBOW

V (FT.)	H (FT.)
1' MIN. (305mm)	5' MAX. (1.52m)
2' MIN. (610mm)	10' MAX. (3.1m)
3' MIN. (914mm)	15' MAX. (4.65m)
4' MIN. (1.22m)	20' MAX. (6.2m)
V+H= 40' MAX. (12.4MM)	H = 20' MAX. (6.2m)

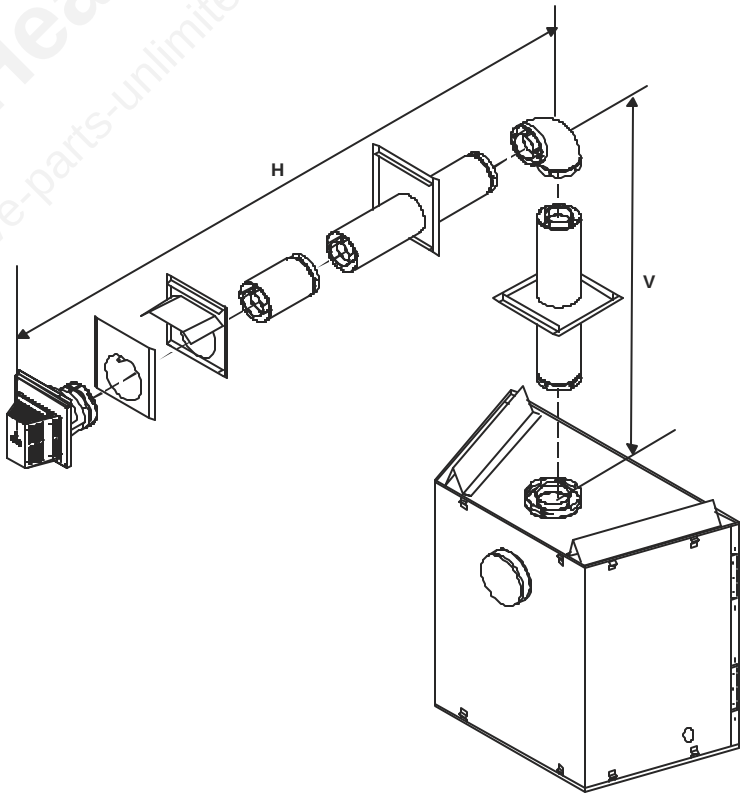

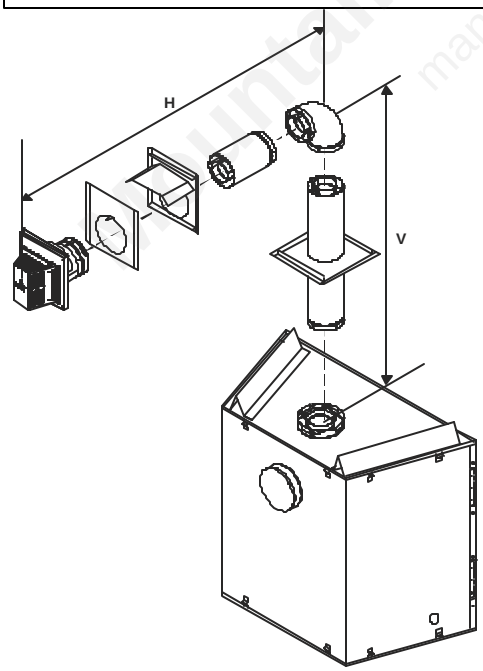

NOTE: For corner installations: A 6-inch (152mm) section of straight pipe may need to be attached to the fireplace before a 90° elbow, to allow the vent pipe to clear the top standoffs.

NOTE: If a 90° elbow is first attached to the unit, the maximum horizontal run is 3-feet (914mm). (In an LP unit the maximum horizontal run in this situation is 30 inches (762mm).

Figure 13. Venting with One 90° Elbow

Mountain View Hearth Products manuals.stove-parts-unlimited.com
Downloaded from www.Manualslib.com manuals search engine

VENTING WITH TWO (2) 90° ELBOWS

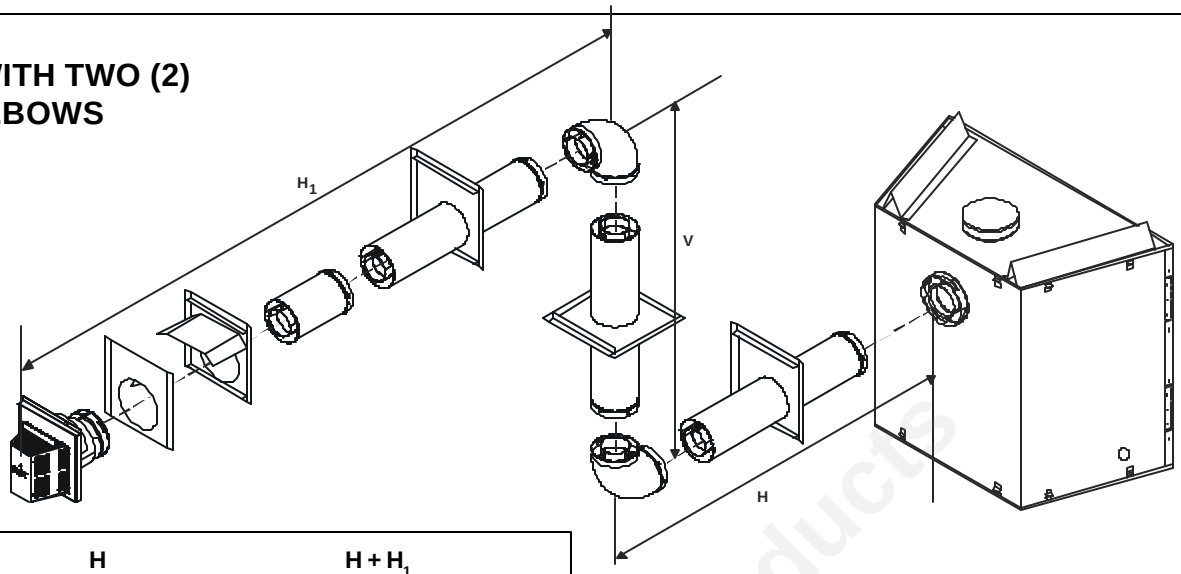

V	H	H + H_1
1´ MIN. (305 mm)	2´ MAX. (610 mm)	5´ MAX. (1.52m)
2´ MIN. (610 mm)	4´ MAX. (1.22 m)	10´ MAX. (3.1m)
3´ MIN. (914 mm)	6´ MAX. (1.86 m)	15´ MAX. (4.65m)
4´ MIN. (1.22 m)	8´ MAX. (2.48 m)	20´ MAX. (6.2m)

$V+H+H_1$ = 40´ MAX. (12.4 m) H = 8´ MAX. (2.48 m) $H+H_1$ = 20´ MAX. (6.2m)

Figure 14. Venting with Two 90° Elbows

VENTING WITH TWO (2) 90° ELBOWS

V FT.	H + H_1 (FT.)
1' MIN. (305mm)	5´ MAX. (1.52m)
2' MIN. (610mm)	10´ MAX. (3.1m)
3' MIN. (914mm)	15´ MAX. (4.65m)
4' MIN. (1.22m)	20´ MAX. (6.2m)

$V+H+H_1$= 40' MAX.(12.4m) $H+H_1$ = 20´ MAX. (6.2m)
$V+V_1+H$= 40' MAX.(12.4m)

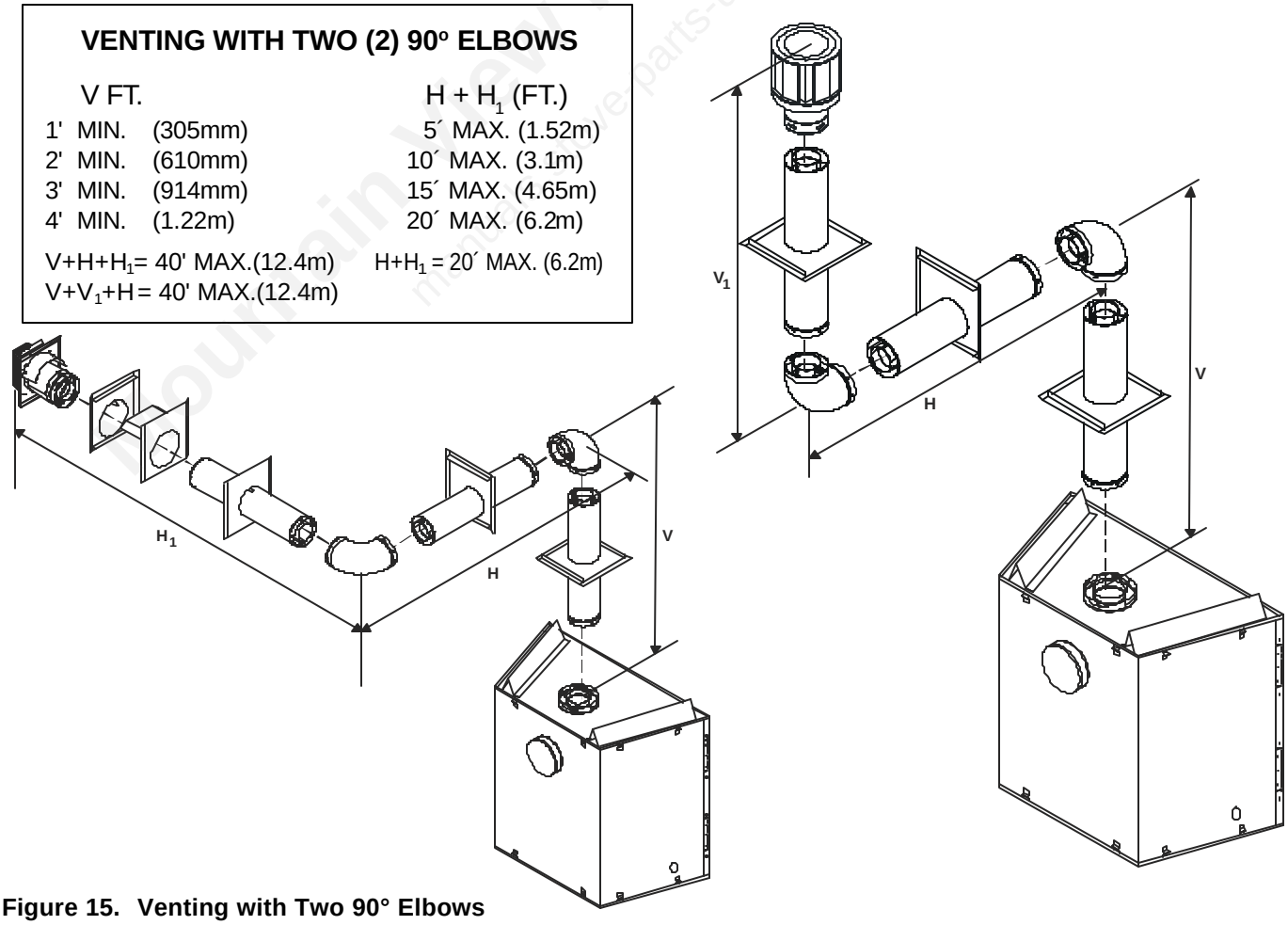

Figure 15. Venting with Two 90° Elbows

Mountain View Hearth Products | manuals.stoveparts-unlimited.com
Downloaded from www.Manualslib.com manuals search engine

Venting with Two 90° Elbows

V (FT)	$H + H_1$ (FT)
1' MIN. (305 mm)	2' MAX. (610 mm)
2' MIN. (610 mm)	4' MAX. (1.22 m)
3' MIN. (914 mm)	6' MAX. (1.86 m)
4' MIN. (1.22 m)	8' MAX. (2.48 m)
	$H + H_1$= 8' MAX. (2.48 m)

$V + H + H_1$= 40' (12.2m) MAX.

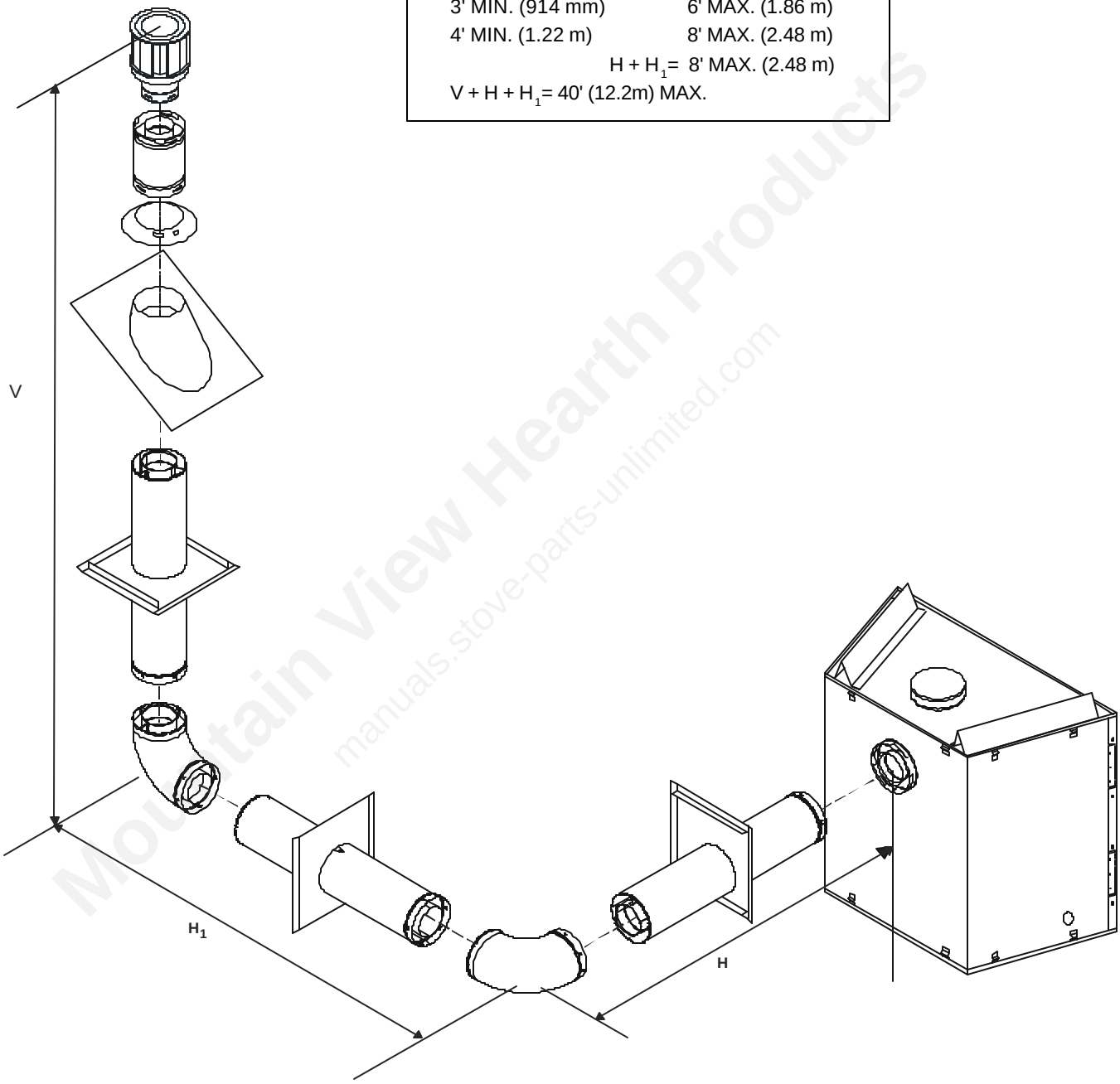

Figure 16. Venting with Two 90° Elbows

Mountain View Hearth Products - manuals.stove-parts-unlimited.com
Downloaded from www.Manualslib.com manuals search engine

VENTING WITH THREE (3) 90° ELBOWS

V	H	H + H_1
1´MIN. (305mm)	2´MAX. (610mm)	5´MAX. (1.52m)
2´MIN. (610mm)	4´MAX. (1.22m)	10´MAX. (3.1m)
3´MIN. (914mm)	6´MAX. (1.86m)	15´MAX. (4.65m)
4´MIN. (1.22m)	8´MAX. (2.48m)	20´MAX. (6.2m)

V_1+V+H+H_1 = 40´ MAX.(12.4 m) H = 8´MAX.(2.48 m) H+H_1 = 20´MAX.(6.2 m)

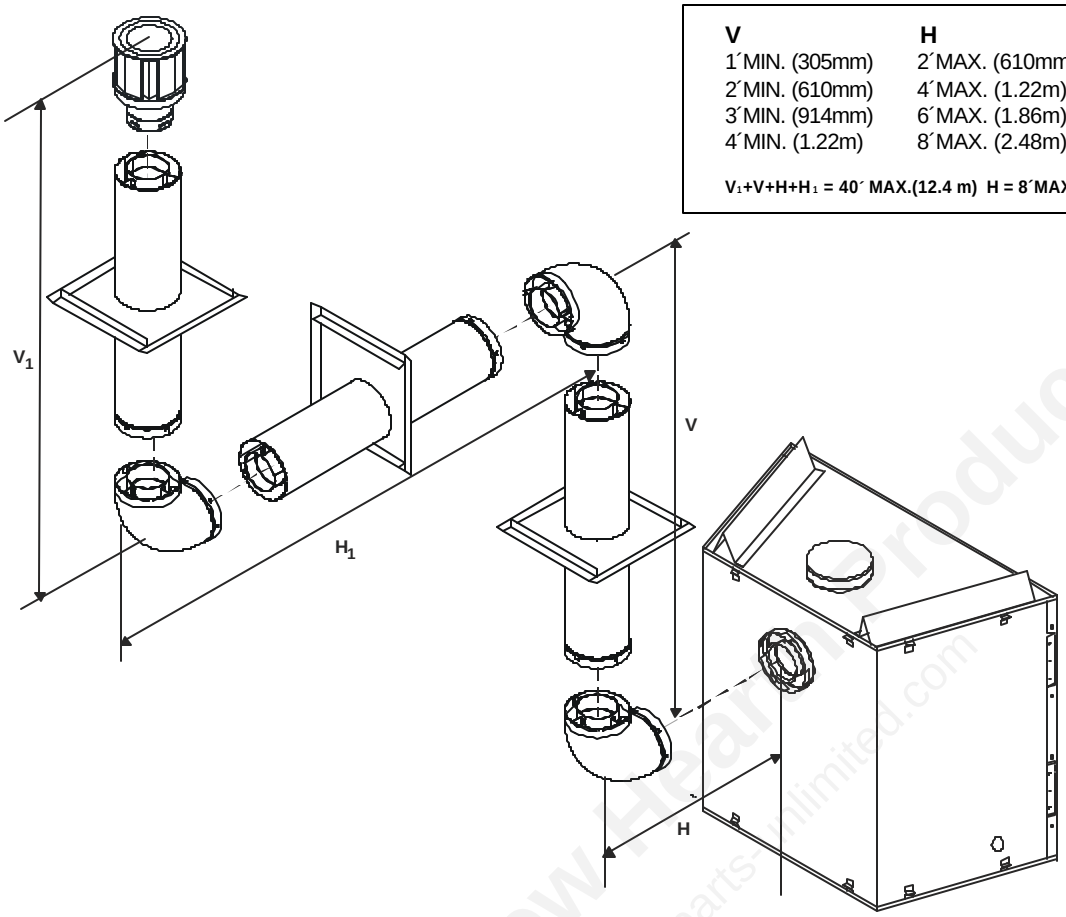

V	H	H + H_1 + H_2
1´MIN. (305mm)	2´MAX. (610mm)	5´MAX. (1.52m)
2´MIN. (610mm)	4´MAX. (1.22m)	10´MAX. (3.1m)
3´MIN. (914mm)	6´MAX. (1.86m)	15´MAX. (4.65m)
4´MIN. (1.22m)	8´MAX. (2.48m)	20´MAX. (6.2m)

V+H+H_1+H_2 = 40´ MAX. (12.4 m) H = 8´ MAX. (2.48 m) H+H_1+H_2 = 20´ MAX. (6.2 m)

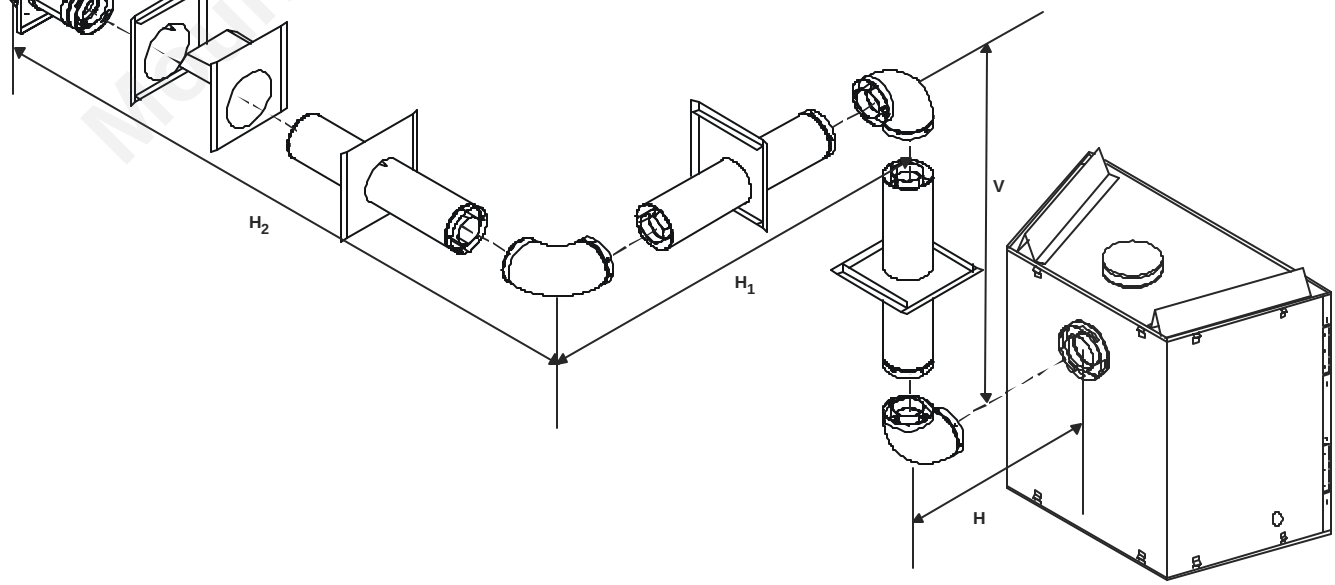

Figure 17. Venting with three 90° elbows

Mountain View Hearth Products
manuals.stove-parts-unlimited.com

Downloaded from www.Manualslib.com manuals search engine
Mountain View Hearth Products - manuals.stove-parts-unlimited.com

VENTING WITH THREE (3) 90° ELBOWS

V (FT.)	H (FT.)
1' MIN. (305mm)	5' MAX. (1.52m)
2' MIN. (610mm)	10' MAX. (3.1m)
3' MIN. (914mm)	15' MAX. (4.65m)
4' MIN. (1.22m)	20' MAX. (6.2m)

NOTE: $H + H_1$ = 20' MAX. (6.2m)
$V + V_1 + H + H_1$ = 40' MAX. (12.4m)

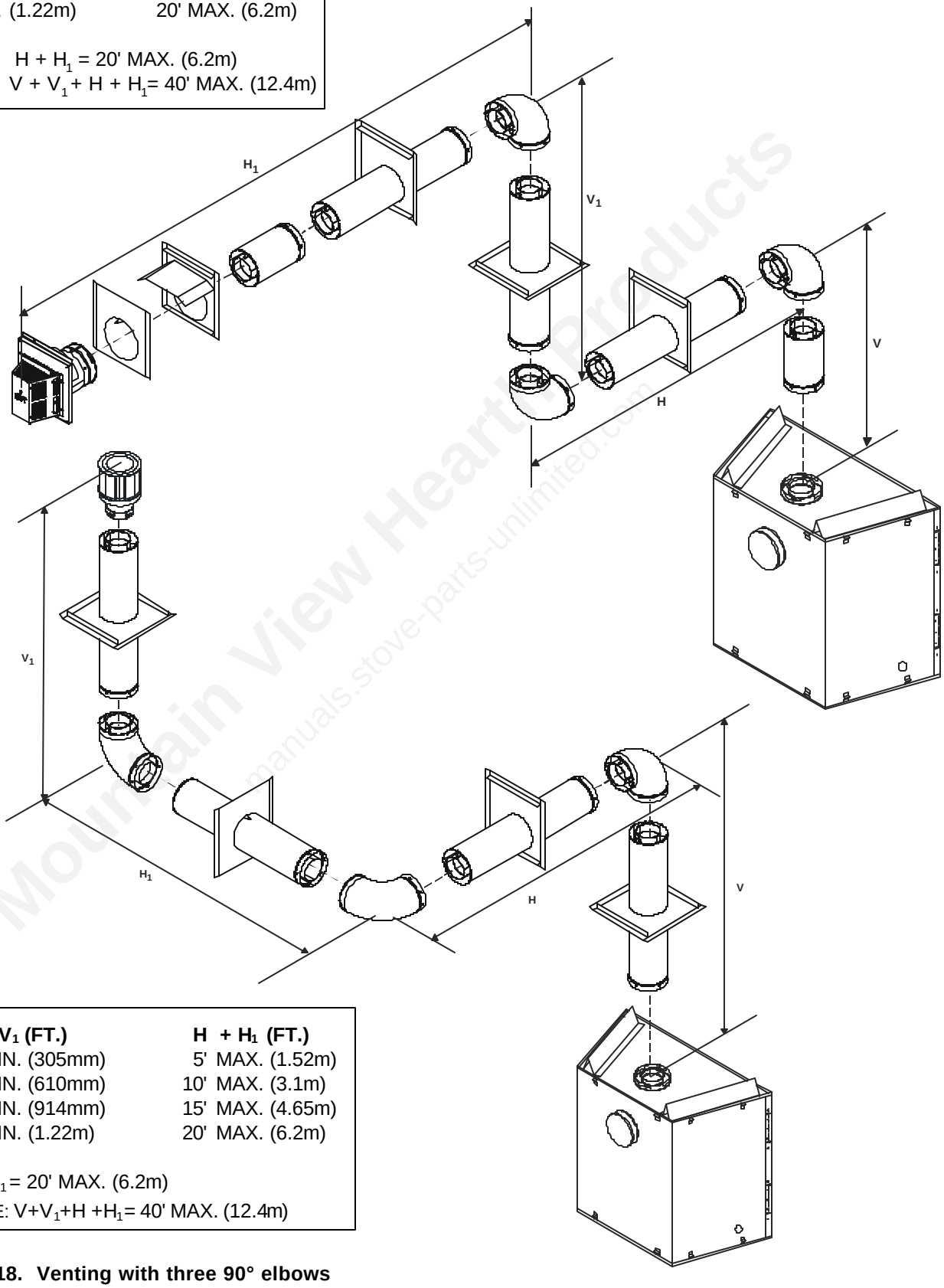

$V + V_1$ (FT.)	$H + H_1$ (FT.)
1' MIN. (305mm)	5' MAX. (1.52m)
2' MIN. (610mm)	10' MAX. (3.1m)
3' MIN. (914mm)	15' MAX. (4.65m)
4' MIN. (1.22m)	20' MAX. (6.2m)

$H + H_1$ = 20' MAX. (6.2m)
NOTE: $V+V_1+H+H_1$ = 40' MAX. (12.4m)

Figure 18. Venting with three 90° elbows

Mountain View Hearth Products - manuals.stove-parts-unlimited.com
Downloaded from www.Manualslib.com manuals search engine

B. Installing Vent Components

After determining which set of starting collars will be used (top or rear), follow venting instructions accordingly.

Venting Out the Rear Vent

Remove the installed rear seal cap from the rear starting collars by cutting the strap at each end. (see Figure 19). Follow the vent configuration tables accordingly.

Remove the insulation from the **REAR** five inch flue, pull the heat shield out from outside of the firebox.

> ⚠ **WARNING: THE TOP HEAT SHIELD (INSIDE THE FIREBOX) MUST REMAIN ATTACHED IF THE VENT SYSTEM IS ATTACHED TO THE REAR STARTING COLLARS. SEE FIGURE 19.**

Venting Out the Top Vent

Remove the two screws in the top vent collar seal cap and remove the top vent collar seal cap and two pieces of insulation inside the top two starting collars (See Figure 19).

Remove the heat shield from inside the **TOP** five inch flue from outside of the firebox.

> ⚠ **WARNING: THE REAR VENT COLLAR SEAL CAP MUST REMAIN ATTACHED TO THE REAR VENT COLLARS IF THE VENT SYSTEM IS ATTACHED TO THE TOP STARTING COLLARS.**

> ⚠ **WARNING: FAILURE TO REMOVE INSULATION IN THE SET OF COLLARS YOU ARE USING COULD NEGATIVELY AFFECT FIREPLACE PERFORMANCE.**

> ⚠ **WARNING: YOU MUST LEAVE THE INSULATION IN PLACE IN THE SET OF COLLARS YOU ARE NOT USING. FAILURE TO DO THIS COULD CAUSE A FIRE.**

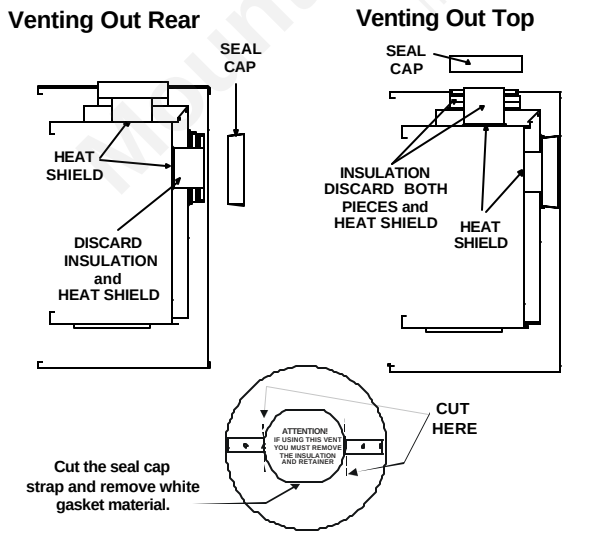

Figure 19.

1. Attach the First Vent Component to the Starting Collars

To attach the first vent component to the starting collars of the fireplace:

- Make sure that the fiberglass gasket supplied in the manual bag seals between the first 8 inch (203mm) vent component and the outer fireplace wrap. Using 2 self-tapping screws from the manual bag secure that gasket to the outer wrap (see Figure 20).

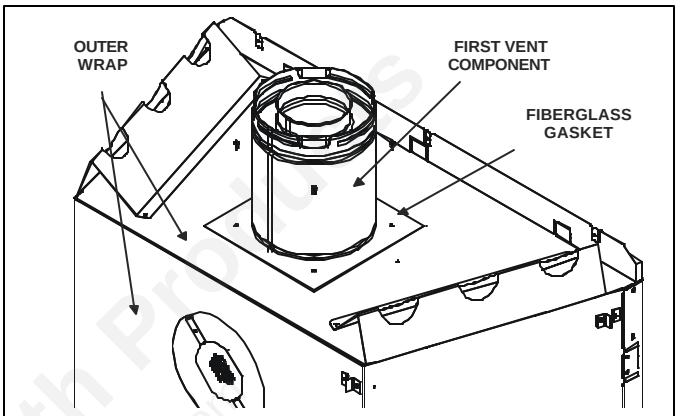

Figure 20. Fiberglass Gasket

DVP PIPE:

1. Attaching the Venting to the Fireplace

Refer to Cinch Pipe and Termination Cap installation instructions.

2. Assembling Vent Sections

Refer to Cinch Pipe and Termination Cap installation instructions.

> ⚠ **WARNING: ENSURE THAT THE FIBERGLASS GASKET SUPPLIED WITH THE FIREPLACE SEALS BETWEEN THE FIRST VENT COMPONENT AND THE OUTER FIREPLACE WRAP.**

If the installation is for a termination cap attached directly to the fireplace, skip to the sections, **Install Firestops** and **Vent Termination**.

Mountain View Hearth Products manuals.stoveparts-unlimited.com
Downloaded from www.Manualslib.com manuals search engine

3. Continue Adding Vent Components

WARNING: INSTALLATION OF THIS FIREPLACE REQUIRES THE USE OF HEAT SHIELD 570-290 ABOVE THE FIRST 90⁰ ELBOW IN THE VENTING SYSTEM.

To Install the Heat Shield:

1. Determine if the heat shield is required. Do so by measuring the vertical distance between the top horizontal surface of the elbow to any combustible surface above. If the distance is more than 4 inches, the heat shield is **NOT** required. If it is 4 inches or less, the heat shield **IS REQUIRED**. Install per the following steps. See Figure 21.

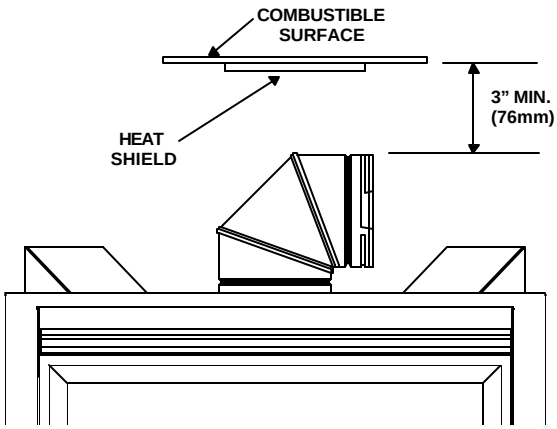

Figure 21

2. Fasten the shield in place using the four pilot holes provided in the part. The shield should be oriented such that the 13 1/8 inch dimension (longest dimension) is running in the same direction the elbow is pointing. The shield should be centered directly above the elbow, and positioned so that it creates a 1/2 inch airspace between the shield and the combustible surface. See Figure 22.

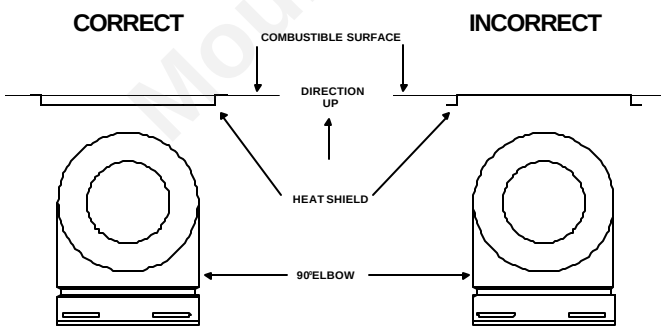

Figure 22

- If the combustible materials are not in place at the time of install the elbow heat shield may be screwed to the exhaust pipe (see Figure 23). Cut the tabs as shown and bend down. Using the screws found in the manual bag secure the heat shield to the pipe maintaining 3" to 4" between the pipe and shield.

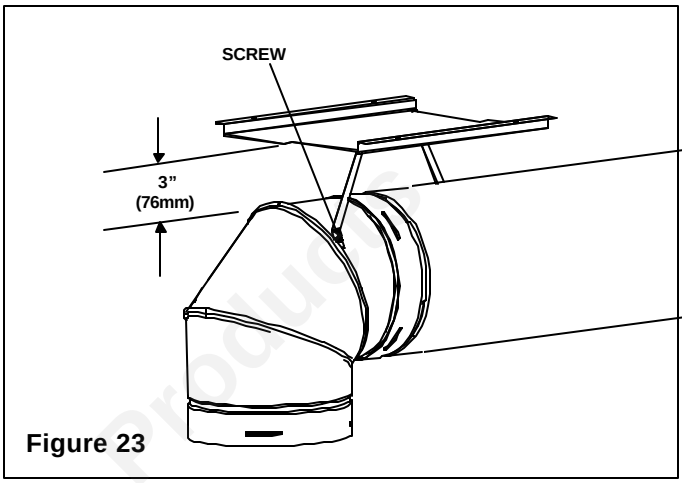

Figure 23

Refer to Cinch Pipe and Termination Cap installation instructions.

- Continue adding vent components, locking each succeeding component into place.
- Ensure that each succeeding vent component is securely fitted and locked into the preceding component in the vent system.
- 90° elbows may be installed and rotated to any point around the preceding component's vertical axis. If an elbow does not end up in a locked position with the preceding component, attach with a minimum of two (2) sheet metal screws.

4. Install Support Brackets

Refer to Cinch Pipe and Termination Cap installation instructions.

Mountain View Hearth Products manuals.stoveparts-unlimited.com
Downloaded from www.Manualslib.com manuals search engine

5. Install Firestops

For Horizontal Runs - Firestops are **REQUIRED** on both sides of a combustible wall through which the vent passes.

NOTE: Model DVP-TRAP does not need an exterior firestop on an exterior combustible wall.

To install firestops for horizontal runs that pass through either interior or exterior walls:

- Cut a 10-inch by 12-inch (254mm x 305mm) hole through the wall.

NOTE: The center of the hole is one (1) inch (25.4mm) above the center of the horizontal vent pipe.

- Position the firestops on both sides of the hole previously cut and secure the firestops with nails or screws.
- The heat shields of the firestops **MUST BE** placed towards the top of the hole.
- Continue the vent run through the firestops.

NOTE: There must be NO INSULATION or other combustibles inside the framed firestop opening.

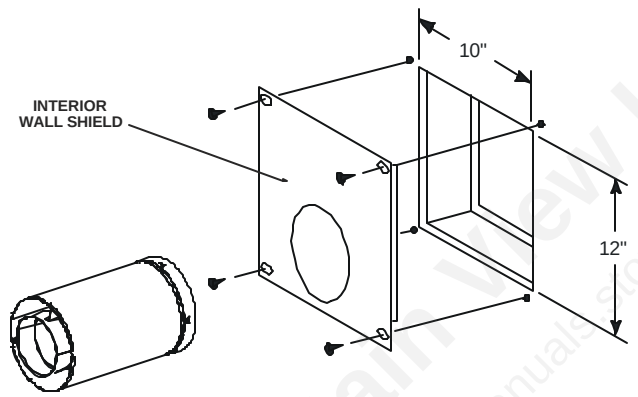

Figure 24. 10" x 12" Hole and Vent Pipe

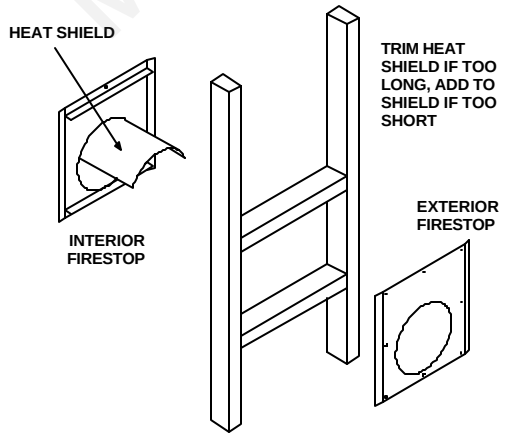

Figure 25. Heat Shield, Interior & Exterior Firestops

For Vertical Runs - One ceiling firestop is **REQUIRED** at the hole in each ceiling through which the vent passes.

To install firestops for vertical runs that pass through ceilings:

- Position a plumb bob directly over the center of the vertical vent component.
- Mark the ceiling to establish the centerpoint of the vent.
- Drill a hole or drive a nail through this centerpoint.
- Check the floor above for any obstructions, such as wiring or plumbing runs.
- Reposition the fireplace and vent system, if necessary, to accommodate the ceiling joists and/or obstructions.
- Cut an 10-inch x 10-inch (254mm x 254mm) hole through the ceiling, using the centerpoint previously marked.
- Frame the hole with framing lumber the same size as the ceiling joists.

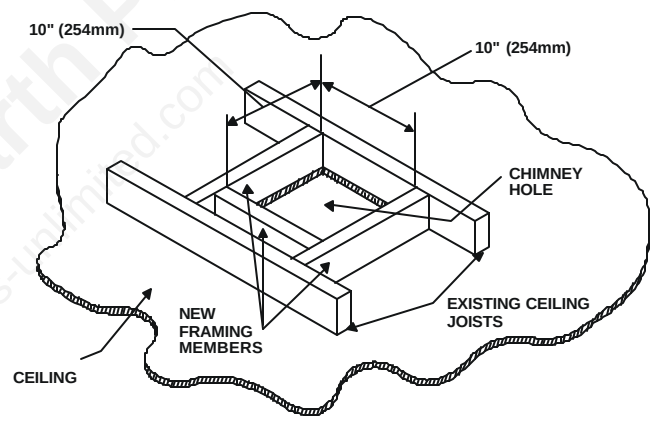

Figure 26. 10" x 10" Hole & New Framing Members

If the area above the ceiling is **NOT** an attic, position and secure the ceiling firestop on the ceiling side of the previously cut and framed hole.

Mountain View Hearth Products | manuals.stoveparts-unlimited.com
Downloaded from www.Manualslib.com manuals search engine

NOTE: There must be NO INSULATION or other combustibles inside the framed firestop opening.

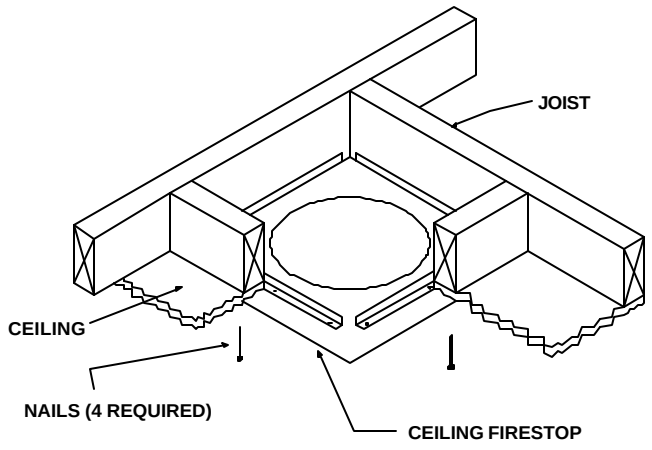

Figure 27. Ceiling Firestop (Ceiling Side)

If the area above the ceiling **IS** an attic, position and secure the firestop on top of the previously framed hole.

NOTE: Keep insulation away from the vent pipe at least 1 inch (25mm).

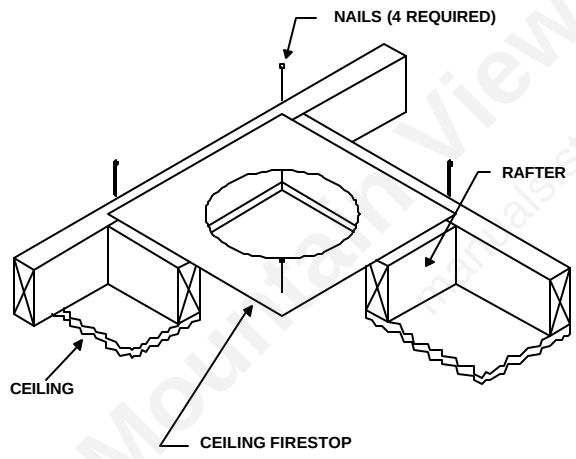

Figure 28. Attic Firestop

C. Vent Termination

Refer to Cinch Pipe and Termination Cap installation instructions.

Horizontal Termination

- The termination kit should pass through the wall firestops from the exterior of the building.
- Adjust the termination cap to its final exterior position on the building and interlock the flue sections.

WARNING: THE TERMINATION CAP MUST BE POSITIONED SO THAT THE ARROW IS POINTING UP.

WARNING: VENTING TERMINALS SHALL NOT BE RECESSED INTO A WALL OR SIDING. VENT TERMINATION CLEARANCES MUST BE FOLLOWED TO AVOID FIRE DANGER. SEE VENT TERMINATION MINIMUM CLEARANCES DIAGRAM ON FOLLOWING PAGE.

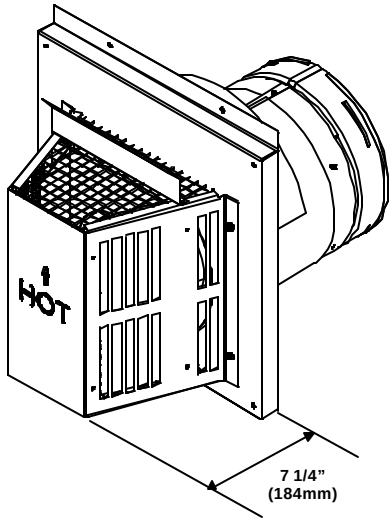

Figure 29. Trapezoid Termination Cap

Downloaded from www.Manualslib.com manuals search engine

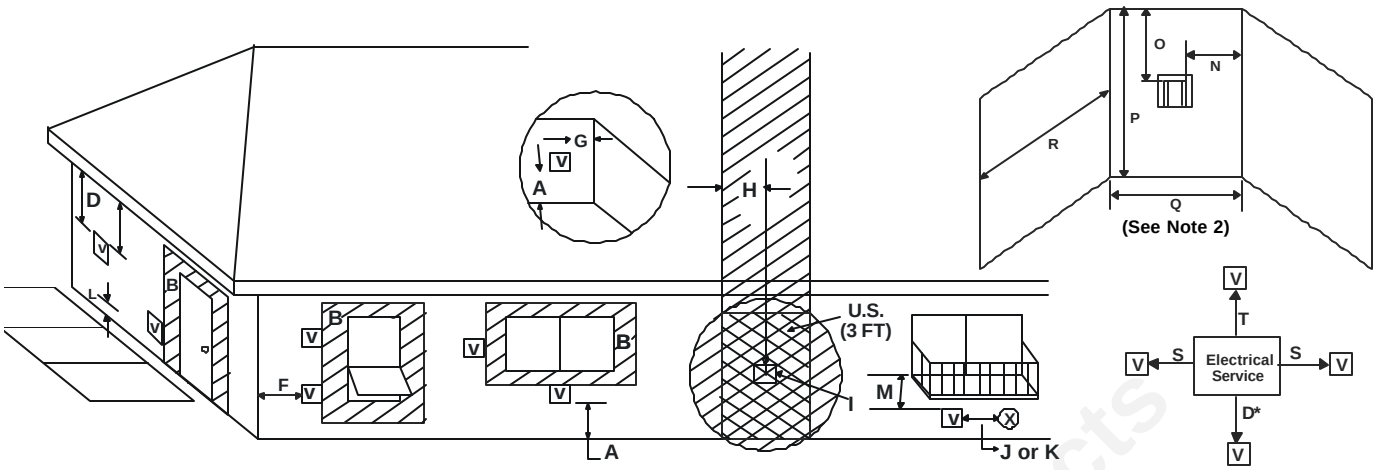

V = VENT TERMINAL X = AIR SUPPLY INLET = AREA WHERE TERMINAL IS NOT PERMITTED

A = 12" (See Note 1) ..... clearances above grade, veranda, porch, deck or balcony

B = 12" ..... clearances to window or door that may be opened, or to permanently closed window.

D* = 18" ..... vertical clearance to unventilated soffit or to ventilated soffit located above the terminal

*30" min. ..... for vinyl clad soffits and below electrical service

F = 9" ..... clearance to outside corner

G = 6" ..... clearance to inside corner

H = 3 ft. (Canada) ..... not to be installed above a gas meter/regulator assembly within 3 feet (90cm) horizontally from the center-line of the regulator

I = 3 ft. (U.S.A.)
6 ft. (Canada) ..... clearance to gas service regulator vent outlet

J = 9" (U.S.A.)
12" (Canada) ..... clearance to non-mechanical air supply inlet to building or the combustion air inlet to any other appliance

K = 3 ft. (U.S.A.)
6 ft. (Canada) ..... clearance to a mechanical air supply inlet

L** = 7 ft. (See Note 1) ..... clearance above paved sidewalk or a paved driveway located on **public** property

M*** = 18" ..... clearance under veranda, porch, deck or balcony

N = 6" ..... non-vinyl sidewalls
12" ..... vinyl sidewalls

O = 18" ..... non-vinyl soffit and overhang
42" ..... vinyl soffit and overhang

P = 8 ft.

	Q_{MIN}	R_{MAX}
1 cap	3 feet	2 x Q_{ACTUAL}
2 caps	6 feet	1 x Q_{ACTUAL}
3 caps	9 feet	2/3 x Q_{ACTUAL}
4 caps	12 feet	1/2 x Q_{ACTUAL}
Q_{MIN} = # termination caps x 3		R_{MAX} = (2 / # termination caps) x Q_{ACTUAL}

S = 6" MIN. (See Note 5) ..... clearance from sides of electrical service

T = 12" MIN. (See Note 5) ..... clearance above electrical service

** a vent shall not terminate directly above a sidewalk or paved driveway which is located between two single family dwellings and serves both dwellings.

*** only permitted if veranda, porch, deck or balcony is fully open on a minimum of 2 sides beneath the floor.

NOTE 1: On private property where termination is less than 7 feet above a sidewalk, driveway, deck, porch, veranda or balcony, use of a listed cap shield is suggested.

NOTE 2: Termination in an alcove space (spaces open only on one side and with an overhang) are permitted with the dimensions specified for vinyl or non-vinyl siding and soffits. **1**. There must be 3 feet minimum between termination caps. **2.** All mechanical air intakes within 10 feet of a termination cap must be a minimum of 3 feet below the termination cap. **3.** All gravity air intakes within 3 feet of a termination cap must be a minimum of 1 foot below the termination cap.

Figure 30. Vent Termination Minimum Clearances

NOTE 3: Local codes or regulations may require different clearances.

NOTE 4: Termination caps may be hot. Consider their proximity to doors or other traffic areas.

NOTE 5: Location of the vent termination must not interfere with access to the electrical service.

WARNING: In the U.S: Vent system termination is **NOT** permitted in screened porches. You must follow side wall, overhang and ground clearances as stated in the instructions.

In Canada: Vent system termination is **NOT** permitted in screened porches. Vent system termination is permitted in porch areas with two or more sides open. You must follow all side walls, overhang and ground clearances as stated in the instructions.

Heat-N-Glo assumes no responsibility for the improper performance of the fireplace when the venting system does not meet these requirements.

CAUTION: *IF EXTERIOR WALLS ARE FINISHED WITH VINYL SIDING, IT IS SUGGESTED THAT A VINYL PROTECTOR KIT BE INSTALLED.*

Mountain View Hearth Products - manuals.stoveparts-unlimited.com
Downloaded from www.Manualslib.com manuals search engine

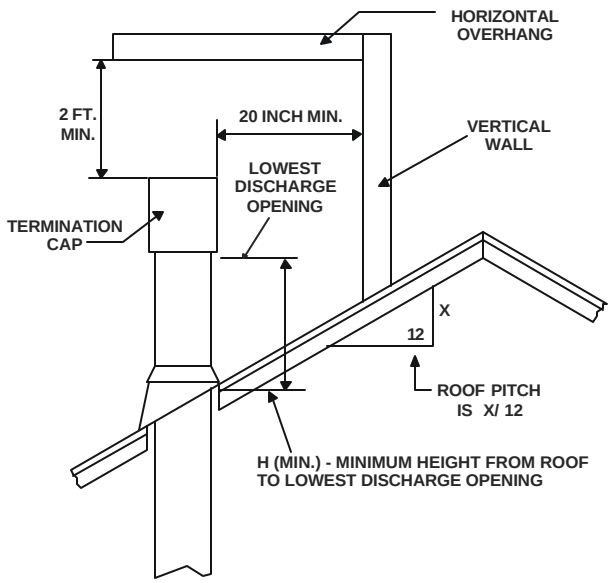

Roof Pitch	H (min.) ft.
flat to 6/12	1.0
6/12 to 7/12	1.25
over 7/12 to 8/12	1.5
over 8/12 to 9/12	2.0
over 9/12 to 10/12	2.5
over 10/12 to 11/12	3.25
over 11/12 to 12/12	4.0
over 12/12 to 14/12	5.0
over 14/12 to 16/12	6.0
over 16/12 to 18/12	7.0
over 18/12 to 20/12	7.5
over 20/12 to 21/12	8.0

Figure 31. Minimum Height from Roof to Lowest Discharge Opening

For Vertical Terminations - To locate the vent and install the vent sections:

- Locate and mark the vent centerpoint on the underside of the roof, and drive a nail through the centerpoint.
- Make the outline of the roof hole around the centerpoint nail.
- The size of the roof hole framing dimensions depend on the pitch of the roof. There **MUST BE** a 1-inch (25.4mm) clearance from the vertical vent pipe to combustible materials.
- Mark the roof hole accordingly.
- Cover the opening of the installed vent pipes.
- Cut and frame the roof hole.
- Use framing lumber the same size as the roof rafters and install the frame securely. Flashing anchored to the frame must withstand heavy winds.
- Continue to install concentric vent sections up through the roof hole (for inside vent installations) or up past the roof line until you reach the appropriate distance above the roof (for outside terminations).

WARNING: MAJOR U.S. BUILDING CODES SPECIFY MINIMUM CHIMNEY AND/OR VENT HEIGHT ABOVE THE ROOF TOP. THESE MINIMUM HEIGHTS ARE NECESSARY IN THE INTEREST OF SAFETY. SEE FIGURE 31 FOR MINIMUM HEIGHTS, PROVIDED THE TERMINATION CAP IS AT LEAST 20 INCHES FROM A VERTICAL WALL AND 2-FEET BELOW A HORIZONTAL OVERHANG.

NOTE: This also pertains to vertical vent systems installed on the outside of the building.

To seal the roof hole, and to divert rain and snow from the vent system:

- Attach a flashing to the roof using nails, and use a non-hardening mastic around the edges of the flashing base where it meets the roof.
- Attach a storm collar over the flashing joint to form a water-tight seal. Place non-hardening mastic around the joint, between the storm collar and the vertical pipe.
- Slide the termination cap over the end of the vent pipe and snap into place.

Step 4. Positioning, Leveling, and Securing the Fireplace

The diagram below shows how to properly position, level, and secure the fireplace.

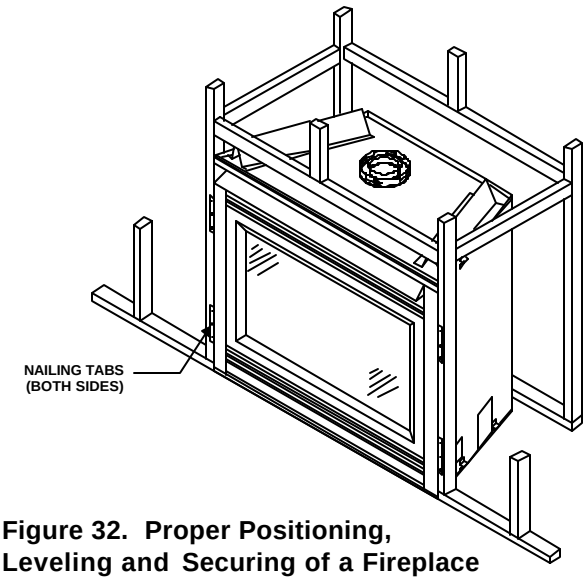

Figure 32. Proper Positioning, Leveling and Securing of a Fireplace

- Place the fireplace into position.
- Level the fireplace from side to side and front to back.
- Shim the fireplace with non-combustible material, such as sheet metal, as necessary.
- Secure the fireplace to the framing by nailing or screwing.

Mountain View Hearth Products manuals.stoveparts-unlimited.com
Downloaded from www.Manualslib.com manuals search engine

Step 5. The Gas Control Systems

WARNING: THIS UNIT IS NOT FOR USE WITH SOLID FUEL.

Two types of gas control systems are used with these models: *Standing Pilot Ignition* and *Intermittent Pilot Ignition (IPI).*

Standing Pilot Ignition System
This system includes millivolt control valve, standing pilot, thermopile/thermocouple flame sensor, and piezo ignitor.

WARNING: 110-120 VAC MUST NEVER BE CONNECTED TO A CONTROL VALVE IN A MILLIVOLT SYSTEM.

Intermittent Pilot Ignition (IPI) System
This system includes a 3V control valve, electronic module and intermittent pilot.

WARNING: CONTINUOUS 110-120 VAC SERVICE MUST BE WIRED DIRECTLY TO THE FIREPLACE JUNCTION BOX.

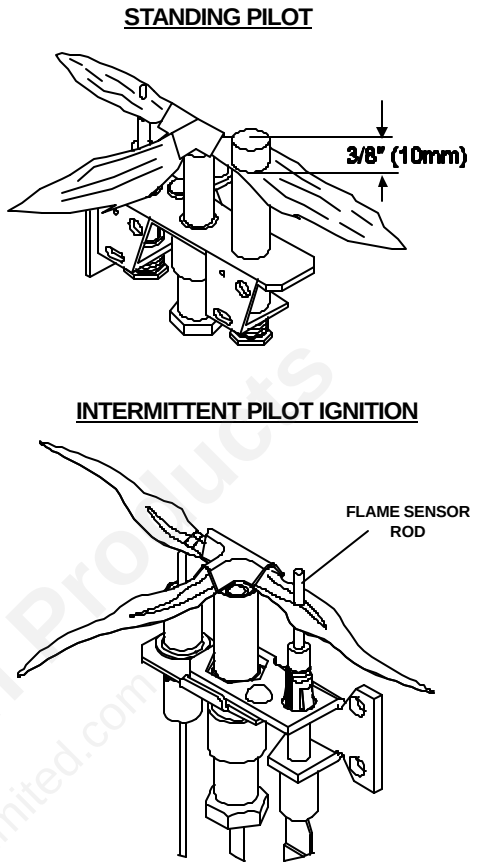

Figure 33. Gas Controls Systems

Mountain View Hearth Products
manuals.stove-parts-unlimited.com

Mountain View Hearth Products - manuals.stove-parts-unlimited.com
Downloaded from www.Manualslib.com manuals search engine

Step 6. The Gas Supply Line

NOTE: Have the gas supply line installed in accordance with local building codes by a qualified installer approved and/or licensed as required by the locality. (In the Commonwealth of Massachusetts installation must be performed by a licensed plumber or gas fitter).

NOTE: Before the first firing of the fireplace, the gas supply line should be purged of any trapped air.

NOTE: Consult local building codes to properly size the gas supply line leading to the 1/2 inch (13mm) hook-up at the unit.

This gas fireplace is designed to accept a 1/2 inch (13 mm) gas supply line. To install the gas supply line:

- A listed (and Commonwealth of Massachusetts approved) 1/2 inch (13mm) tee-handle manual shut-off valve and a listed flexible gas connector are connected to the 1/2 inch (13mm) inlet of the control valve. **NOTE:** If substituting for these components, please consult local codes for compliance.
- Locate the gas line access hole in the outer casing of the fireplace.
- The gas line may be run from either side of the fireplace provided the hole in the outer wrap does not exceed 2 1/2" in diameter and it does not penetrate the actual firebox.
- The gap between the supply piping and gas access hole can be plugged with non-combustible insulation to prevent cold air infiltration.
- Open the fireplace lower grille, insert the gas supply line through the gas line hole, and connect it to the shut-off valve.
- When attaching the pipe, support the control so that the lines are not bent or torn.
- ◆ After the gas line installation is complete, use a commercially available, non-corrosive leak check solution to carefully check all gas connections for leaks.

⚠ **WARNING: DO NOT USE AN OPEN FLAME TO CHECK FOR GAS LEAKS**.

- At the gas line access hole, use insulation to re-pack the space around the gas pipe.
- Insert insulation from the outside of the fireplace and pack the insulation tightly to totally seal between the pipe and the outer casing.

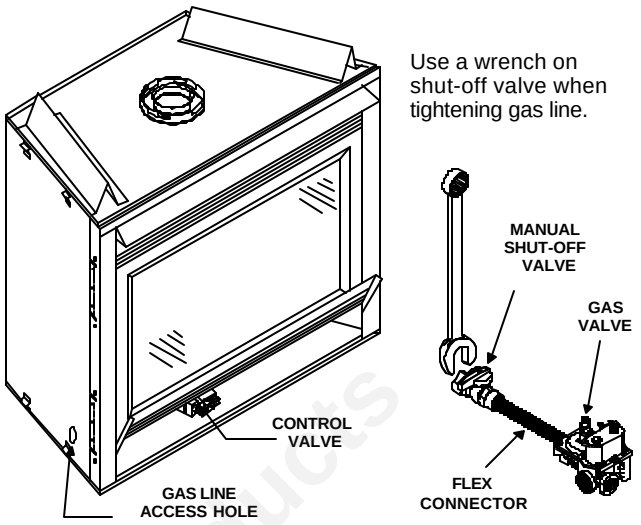

Figure 34. Gas Supply Line

Step 7. Gas Pressure Requirements

Pressure requirements for Heat-N-Glo gas fireplaces are shown in the table below.

Pressure	Natural Gas	Propane
Minimum Inlet Pressure	5.0 inches w.c.	11.0 inches w.c.
Maximum Inlet Gas Pressure	14.0 inches w.c.	14.0 inches w.c.
Manifold Pressure	3.5 inches w.c.	10.0 inches w.c.

A one-eighth (1/8) inch (3 mm) N.P.T. plugged tapping is provided on the inlet and outlet side of the gas control for a test gauge connection to measure the manifold pressure. Use a small flat blade screwdriver to crack open the screw in the center of the tap. Position a rubber hose over the tap to obtain the pressure reading.

The fireplace and its individual shut-off valve must be disconnected from the gas supply piping system during any pressure testing of the system at test pressures in excess of one-half (1/2) psig (3.5 kPa).

The fireplace must be isolated from the gas supply piping system by closing its individual shut-off valve during any pressure testing of the gas supply piping system at test pressures equal to or less than one-half (1/2) psig (3.5 kPa).

Mountain View Hearth Products - manuals.stoveparts-unlimited.com
Downloaded from www.Manualslib.com manuals search engine

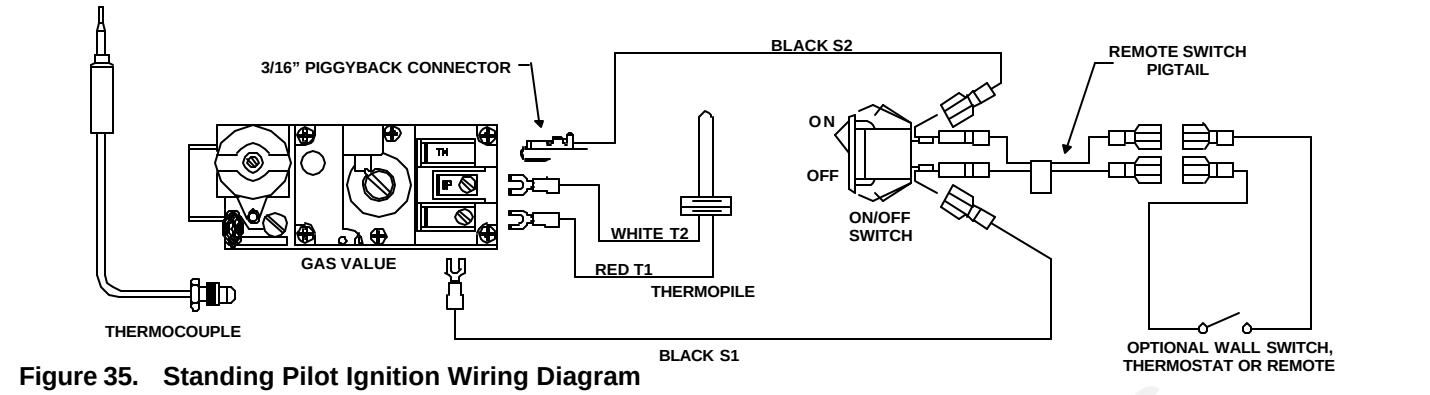

Figure 35. Standing Pilot Ignition Wiring Diagram

Step 8. Wiring the Fireplace

NOTE: Electrical wiring must be installed by a licensed electrician.

CAUTION: DISCONNECT REMOTE CONTROLS IF ABSENT FOR EXTENDED TIME PERIODS. THIS WILL PREVENT ACCIDENTAL FIREPLACE OPERATION.

For Standing Pilot Ignition Wiring

Appliance Requirements

- This appliance **DOES NOT** require 110-120 VAC to operate.

WARNING: DO NOT CONNECT 110-120 VAC TO THE GAS CONTROL VALVE OR THE APPLIANCE WILL MALFUNCTION AND THE VALVE WILL BE DESTROYED.

Optional Accessories

Optional fan and remote control kits require that 110-120 VAC be wired to the factory installed junction box before the fireplace is permanently installed.

Wall Switch

Position the wall switch in the desired position on a wall. Run a maximum of 25 feet (7.8 m) or less length of 18 A.W.G. minimum wire and connect it to the fireplace ON/OFF switch pigtails.

WARNING: DO NOT CONNECT 110-120 VAC TO THE WALL SWITCH OR THE CONTROL VALVE WILL BE DESTROYED.

CAUTION: LABEL ALL WIRES PRIOR TO DISCONNECTION WHEN SERVICING CONTROLS. WIRING ERRORS CAN CAUSE IMPROPER AND DANGEROUS OPERATION. VERIFY PROPER OPERATION AFTER SERVICING.

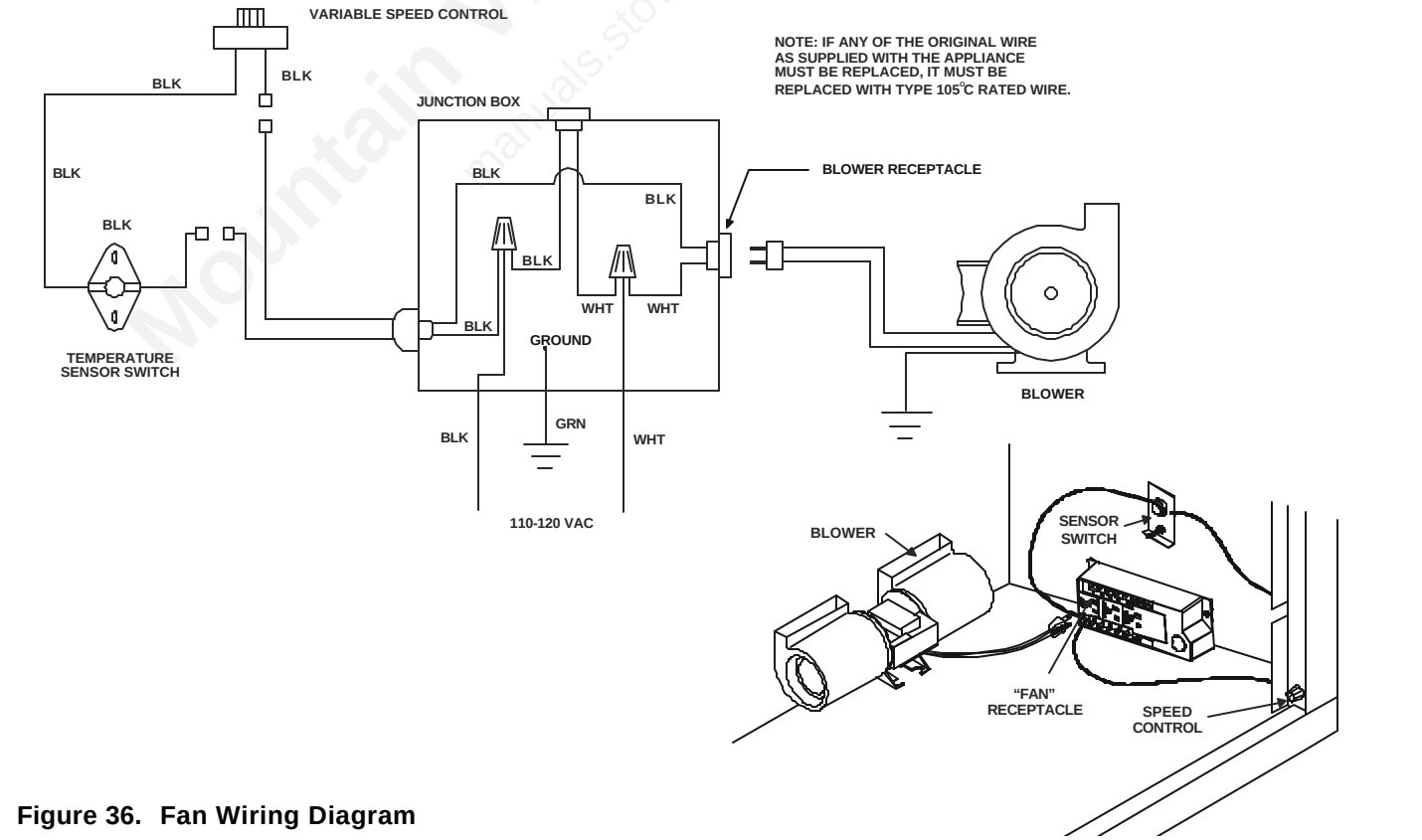

Figure 36. Fan Wiring Diagram

Mountain View Hearth Products - manuals.stoveparts-unlimited.com
Downloaded from www.Manualslib.com manuals search engine

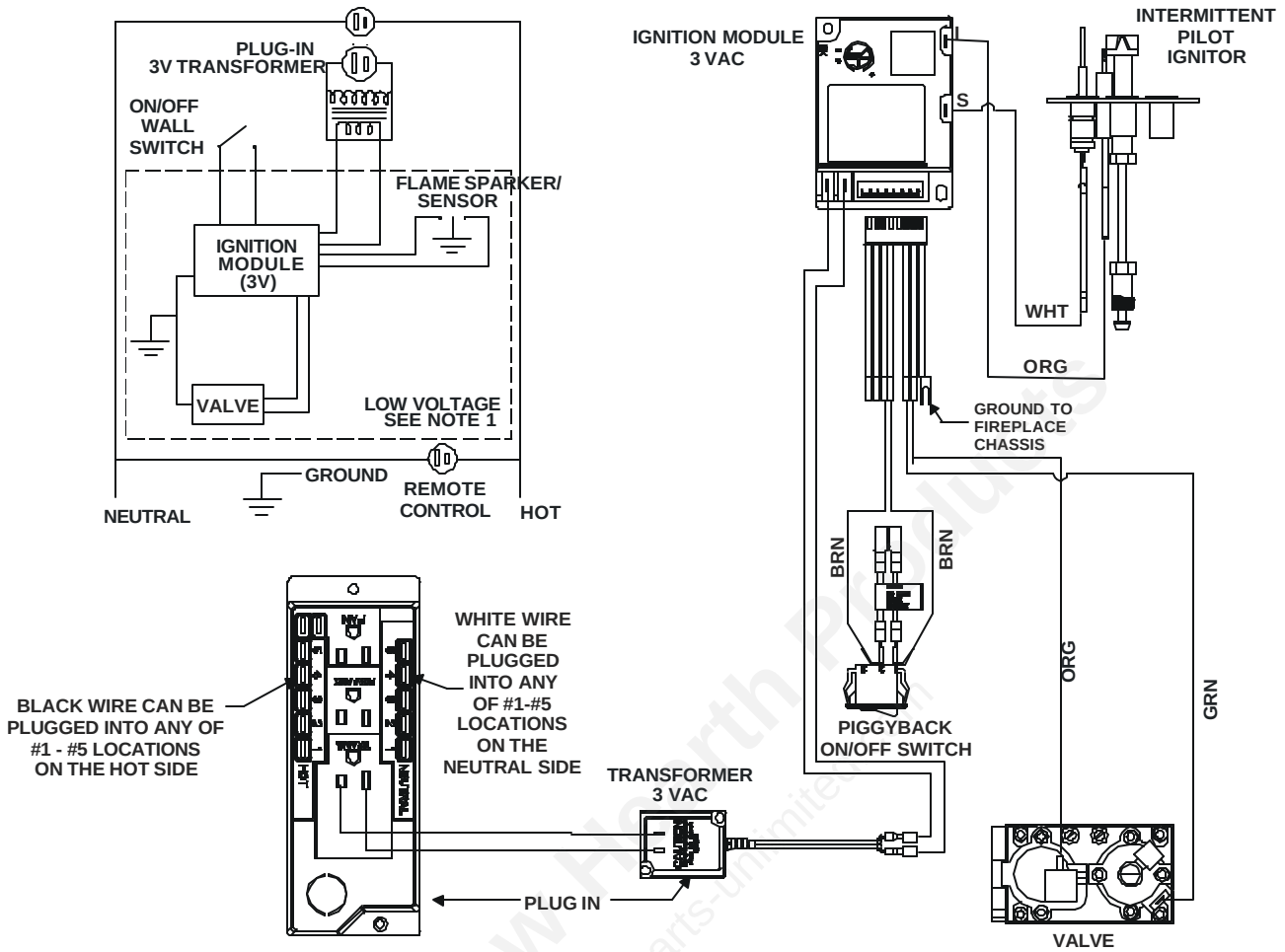

◆ **Figure 37. Intermittent Pilot Ignition (IPI) Wiring Diagram**

Intermittent Pilot Ignition (IPI) Wiring

3 Volt Transformer

This appliance comes with a 3 volt transformer found in the manual bag. Plug the transformer leads to the green control module (see Figure 37). Then plug the transformer into the side outlet on the junction box.

Appliance Requirements

This appliance requires that 110-120 VAC be wired to the factory installed junction box. Maintain correct polarity when wiring the junction box.

> ⚠ **WARNING: DO NOT CONNECT 110-120 VAC TO THE GAS CONTROL VALVE OR THE APPLIANCE WILL MALFUNCTION AND THE VALVE WILL BE DESTROYED.**

Operation using Battery Power

This fireplace has an optional battery operation. The system is fully functional with the use of two “D” size batteries without ordinary 110-120 VAC power.

Wiring to the battery pack should be left disconnected in order to conserve battery life. In the case of a loss of power, simply connect red and black wire leads to activate battery power (connect red to red, black to black). The fireplace can be used as necessary. Once power (110 VAC) is restored, disconnect red and black wire leads to extend battery life.

Optional Accessories

Optional remote control kits require that 110-120 VAC be wired to the factory installed junction box before the fireplace is permanently installed.

Wall Switch

Position the wall switch in the desired position on a wall. Run a maximum of 25 feet (7.8 m) or less length of 18 A.W.G. minimum wire and connect it to the fireplace ON/OFF switch pigtails.

> ⚠ **WARNING: DO NOT CONNECT 110-120 VAC TO THE WALL SWITCH OR THE CONTROL VALVE WILL BE DESTROYED.**

CAUTION: LABEL ALL WIRES PRIOR TO DISCONNECTION WHEN SERVICING CONTROLS. WIRING ERRORS CAN CAUSE IMPROPER AND DANGEROUS OPERATION. VERIFY PROPER OPERATION AFTER SERVICING.

Mountain View Hearth Products - manuals.stoveparts-unlimited.com
Downloaded from www.Manualslib.com manuals search engine

Step 9. Finishing

Figure 38 shows the minimum vertical and corresponding maximum horizontal dimensions of fireplace mantels or other combustible projections above the top front edge of the fireplace. See Figures 2 and 3 for other fireplace clearances.

Only non-combustible materials may be used to cover the black fireplace front.

WARNING: WHEN FINISHING THE FIREPLACE, NEVER OBSTRUCT OR MODIFY THE AIR INLET/OUTLET GRILLES IN ANY MANNER.

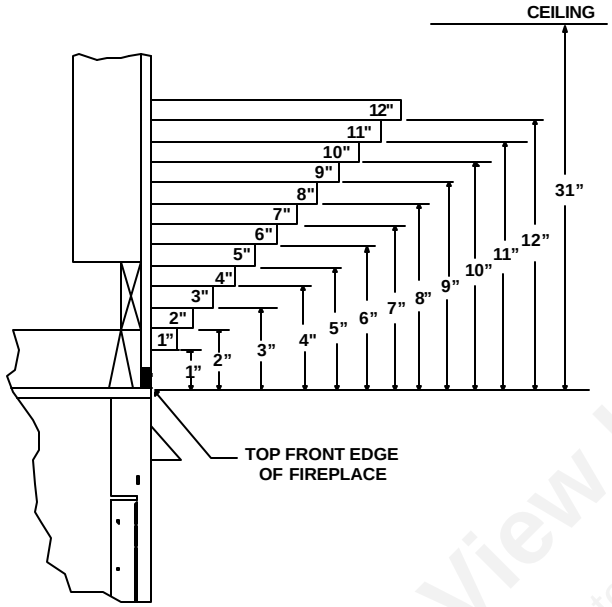

Figure 38.
Minimum Vertical and Maximum Horizontal Dimensions of Combustibles above Fireplace

CAUTION: IF JOINTS BETWEEN THE FINISHED WALLS AND THE FIREPLACE SURROUND (TOP AND SIDES) ARE SEALED, A 300° F. MINIMUM SEALANT MATERIAL MUST BE USED. THESE JOINTS ARE NOT REQUIRED TO BE SEALED. ONLY NON-COMBUSTIBLE MATERIAL (USING 300° F. MINIMUM ADHESIVE, IF NEEDED) CAN BE APPLIED AS FACING TO THE FIREPLACE SURROUND. SEE THE DIAGRAM BELOW.

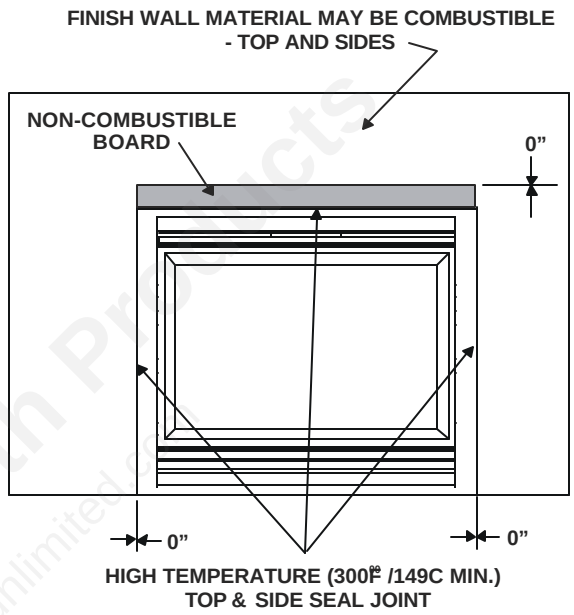

Figure 39. Sealant Material

Hearth Extensions

A hearth extension may be desirable for aesthetic reasons. However, ANSI or CAN/CGA testing standards **do not** require hearth extensions for gas fireplace appliances.

Mountain View Hearth Products - manuals.stoveparts-unlimited.com
Downloaded from www.Manualslib.com manuals search engine

Step 10. Installing Trim, Logs, and Ember Material

Installing the Trim

Combustible materials may be brought up to the specified clearances on the side and top front edges of the fireplace, but **MUST NEVER** overlap onto the front face. The joints between the finished wall and the fireplace top and sides can only be sealed with a 300° F. (149° C) minimum sealant.

WARNING: WHEN FINISHING THE FIREPLACE, NEVER OBSTRUCT OR MODIFY THE AIR INLET/ OUTLET GRILLES IN ANY MANNER.

Install optional marble and brass trim surround kits as desired. Marble, brass, brick, tile, or other non-combustible materials can be used to cover up the gap between the finish wall material (usually sheetrock or wood) and the fireplace.

Do not obstruct or modify the air inlet/outlet grilles. When overlapping on both sides, leave enough space so that the bottom grille can be lowered and the trim door removed.

Positioning the Logs

If the gas logs have been factory installed they should not need to be positioned. If the logs have been packaged separately, refer to the instructions that accompany the logs. **Save the log instructions with this manual.**

If sooting occurs, the logs might need to be repositioned slightly to avoid excessive flame impingement.

Shutter Settings

	NG	LP
Burner	3/8”	5/8”

Placing the Ember Material

Ember material is shipped with this gas fireplace. To place the ember material:

- Pull the four glass latches off of the tabs on the glass frame. Remove glass door from the unit (see Figure 40).
- Embers CANNOT be placed directly over ports. Care should be taken not to cover the lighting trail of ports (from back to front).
- When placing Glowing embers onto the burner care should be taken so that the ports are not covered. Place the embers along side the port trail, but not on or in between the ports. Failure to follow this procedure will likely cause lighting and sooting problems.
- Save the remaining ember materials for use during fireplace servicing.
- Replace the glass door and a front trim door on the unit.
- Pull out and latch the glass clips onto the tabs on the glass frame.

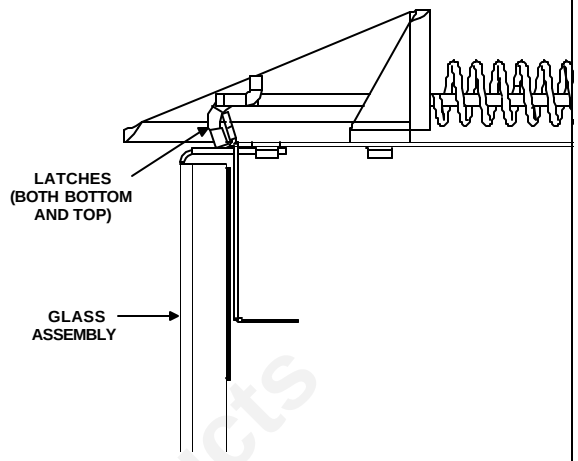

Figure 40. Glass Assembly

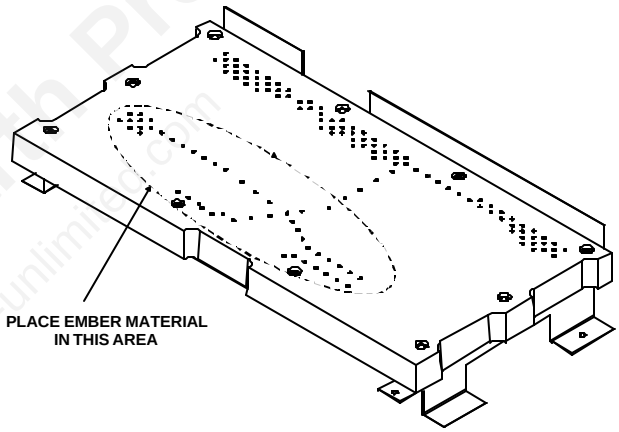

Figure 41. Placement of the Ember Material

Mountain View Hearth Products manuals.stove-parts-unlimited.com
Downloaded from www.Manualslib.com manuals search engine

Glass Specifications:

8000TRD: TEMPERED

Heat-N-Glo fireplaces manufactured with tempered glass may be installed in hazardous locations such as bathtub enclosures as defined by the CPSC. The tempered glass has been tested and certified to the requirements of ANSI Z97.1-1984 and CPSC 16 CFR 1202. (Safety Glazing Certification Council SGCC # 1595 and 1597. Architectural Testing, Inc. Reports 02-31919.01 and 02-31917.01.)

This statement is in compliance with SPCS 16 CFR Section 1201.5 “Certification and labeling requirements” which refers to 15 USC 2063 stating “…Such certificate shall accompany the product or shall otherwise be furnished to any distributor or retailer to whom the product is delivered.”

Some local building codes require the use of tempered glass with permanent marking in such locations. Glass meeting this requirement is available from the factory. Please contact your dealer or distributor to order.

Step 11. Before Lighting the Fireplace

Before lighting the fireplace, be sure to do the following:

Remove all paperwork from underneath the fireplace.

Review safety warnings and cautions

- Read the **Safety and Warning Information** section at the beginning of this *Installers Guide*.

Double-check for gas leaks

- Before lighting the fireplace, double-check the unit for possible gas leaks.

Double-check vent terminations and front grilles for obstructions.

- Before lighting the fireplace, double-check the unit for possible obstructions that could be blocking the vent terminations or the front grilles.

Double-check for faulty components

- Any component that is found to be faulty **MUST BE** replaced with an approved component. Tampering with the fireplace components is **DANGEROUS** and voids all warranties.

A small amount of air will be in the gas supply lines. When first lighting the fireplace, it will take a few minutes for the lines to purge themselves of this air. Once the purging is complete, the fireplace will light and will operate normally.

Subsequent lightings of the fireplace will not require this purging of air from the gas supply lines, **unless the gas valve has been turned to the OFF position**, in which case the air would have to be purged.

NOTE: The fireplace should be run 3 to 4 hours on the initial start-up. Turn it off and let it cool completely. Remove and clean the glass. Replace the glass and run the fireplace for an additional 8 hours. This will help to cure the products used in the paint and logs.

During this break-in period it is recommended that some windows in the house be opened for air circulation. This will help avoid setting off smoke detectors, and help eliminate any odors associated with the fireplace’s initial burning.

Step 12. Lighting the Fireplace

You’ve reviewed all safety warnings, you’ve checked the fireplace for gas leaks, you know the vent system is unobstructed, and you’ve checked for faulty components. Now you’re ready to light the fireplace.

⚠ WARNING: PLEASE REFER TO THE USER’S MANUAL FOR ALL CAUTIONS, SAFETY, AND WARNING INFORMATION PERTAINING TO THE LIGHTING AND OPERATION OF THE FIREPLACE.

After the Installation

⚠ LEAVE THIS INSTALLATION MANUAL WITH THE APPLIANCE FOR FUTURE REFERENCE.

Mountain View Hearth Products - manuals.stoveparts-unlimited.com
Downloaded from www.Manualslib.com manuals search engine

4 Maintaining and Servicing Your Fireplace

Fireplace Maintenance

Although the frequency of your fireplace servicing and maintenance will depend on use and the type of installation, you should have a qualified service technician perform an appliance check-up at the beginning of each heating season. See the table below for specific guidelines regarding each fireplace maintenance task.

IMPORTANT: TURN OFF THE GAS BEFORE SERVICING YOUR FIREPLACE.

Replacing old ember material

Frequency: Once annually, during the checkup.
By: Qualified service technician.
Task: Brush away loose ember material near the burner. Replace old ember material. New ember material should be placed alternately on top of the burner. Save the remaining ember material and repeat this procedure at your next servicing. For more information, see **Placing Ember Material**.

Cleaning Burner and Controls

Frequency: Once annually.
By: Qualified service technician.
Task: Brush or vacuum the control compartment, fireplace logs and burner areas surrounding the logs.

Cleaning Flame Sensor Rod (IPI Systems)

Frequency: Annually.
By: Qualified service technician.
Task: Make a visual check of the straight flame sensor rod (see Figure 33). Use emery cloth to carefully remove any existing film or white deposits.

Checking Flame Patterns, Flame Height

Frequency: Periodically.
By: Qualified service technician/Home owner.
Task: Make a visual check of your fireplace's flame patterns. Make sure the flames are steady - not lifting or floating. See Figure 33. The flame sensor (IPI) or thermopile/ thermocouple (standing pilot) tips should be covered with flame. See Figure 42.

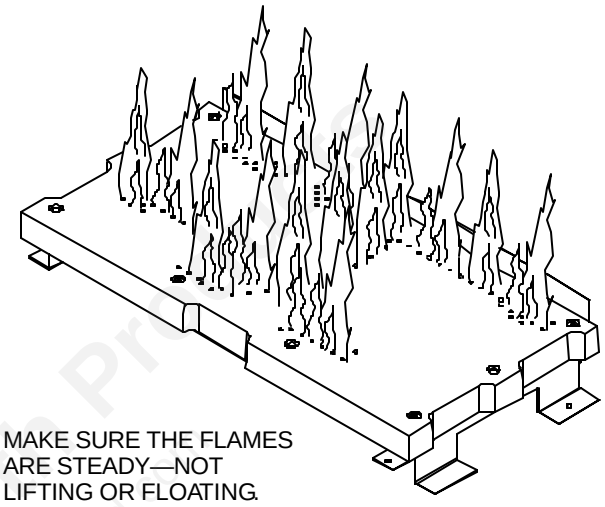

Figure 42. Burner Flame Patterns

Checking Vent System

Frequency: Before initial use and at least annually thereafter, more frequently if possible.
By: Qualified service technician/Home owner.
Task: Inspect the external vent cap on a regular basis to ensure that no debris is interfering with the flow of air. Inspect entire vent system for proper function.

Cleaning Glass Door

Frequency: After the first 3 to 4 hours of use. As necessary after initial cleaning.
By: Home owner.
Task: Remove and clean glass after the first 3 to 4 hours of use. After the initial cleaning, clean as necessary, particularly after adding new ember (flame colorant) material. Film deposits on the inside of the glass door should be cleaned off using a household glass cleaner. **NOTE: DO NOT handle or attempt to clean the door when it is hot and DO NOT use abrasive cleaners.**

Mountain View Hearth Products - manuals.stove-parts-unlimited.com
Downloaded from www.Manualslib.com manuals search engine