Installation Instructions

Model Number VFI30
Vented Gas Fireplace Heater
Insert

Model VFI30 Listed Certified for USA. and Canada
Minimum Fireplace Opening Required: 29”W x 20-3/4”H x 16-1/2”D
Certified to: ANSI Z21.88-2009, CSA 2.33-2009

Intertek
4000720

INSTALLER: Leave this manual with the appliance.
CONSUMER: Retain this manual for future reference.

This appliance may be installed in an aftermarket permanently located, manufactured home (USA only) or mobile home, where not prohibited by local codes.
This appliance is only for use with the type of gas indicated on the rating plate. This appliance is not convertible for use with other gases, unless a certified kit is used.

Read this complete manual before beginning installation.
These instructions must be kept with the unit for future reference.

FOR YOUR SAFETY

WARNING: If the information in these instructions is not followed exactly, a fire or explosion may result causing property damage, personal injury or loss of life.

Warning: Improper installation, adjustment, alteration, service or maintenance can cause property damage, personal injury or loss of life. Refer to this manual. Installation and service must be performed by a qualified installer, service agency or the gas supplier.

Do not store or use gasoline or other flammable vapors and liquids in the vicinity of this or any other appliance.

What To Do If You Smell Gas

Do not try to light any appliance.
Extinguish any open flame.
Do not touch any electrical switch.
Do not use any phone in your building.
Immediately call your gas supplier from a neighbour's phone.
If you can not reach your gas supplier, call the fire department.

WARNING: The VFI30 Fireplace Insert was designed for installation in a solid fuel fireplace that has been installed in accordance with national, provincial/state and local building codes and is constructed of noncombustible materials. Do not remove any refractory materials from any masonry solid fuel fireplace.

The **VFI30** Fireplace Insert was designed for installation in a zero clearance type listed solid fuel burning factory built fireplace. It may be necessary to remove the damper plate, refractory liners, log grates, glass door, and screen rails/mesh. Removal of the smoke baffle is necessary in most cases.

KINGSMAN FIREPLACES Est. 1976

A Division of R-Co. Inc.
2340 Logan Avenue
Winnipeg, Manitoba, Canada R2R 2V3
Ph: (204) 632-1962

WARNING

HOT GLASS WILL CAUSE BURNS.
DO NOT TOUCH GLASS UNTIL COOLED.
NEVER ALLOW CHILDREN TO TOUCH GLASS.

Printed in Canada March 17, 2014 Part # 2000-092 **30VFI-MAN**

Mountain View Hearth Products | manuals.stove-parts-unlimited.com

VFI30 NOTE — Glass Orientation

Please be sure that the fireplace glass is installed correctly. See below.

Gasket is applied to top and sides of glass, and is pressed between glass and face of firebox.

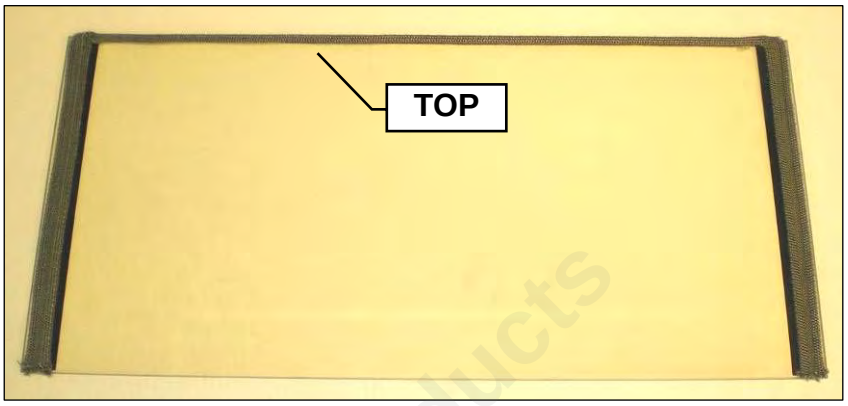

Note orientation of glass before installation on fireplace. Gasket is on top and sides, and will be pressed between firebox and glass when installed.

Glass inserted into Lower Retainer correctly. Press glass up to firebox face with gasket in between glass and fireplace and install Upper Retainer.
Tighten all [4] screws.

KINGSMAN FIREPLACES Est. 1976

Mountain View Hearth Products | manuals.stove-parts-unlimited.com

Pre-installation Questions and Answers

About curing of the paint

Your stove or fireplace has been painted with the highest quality silicone stove paint. This paint dries quickly in 15-20 minutes when first applied at the factory. However, due to the high temperature silicone components, the paint will cure when heat is applied to the appliance as it is first used. The following information applies to the curing process to get the paint fully hard and durable.

Fire the appliance four successive times for 10 minutes each firing and a 5 minute cool down between each. Be aware during log and firebox paint curing that a white deposit may be developing on the inside of the glass doors. It is important to remove this white deposit from the glass doors using a commercial fireplace glass cleaner.

- Babies, small children, pregnant women and pets should leave the area during the cure phase.
- Ventilate well, open doors and windows.
- Do not touch during curing.

Why does my fireplace or stove give off odour?

It is normal for your fireplace to give off some odour. This is due to the curing of the paint, adhesives, silicones and any undetected oil from the manufacturing process as well as the finishing materials used with the installations (e.g. marble, tile and the adhesives used to adhere this product to the walls can react with heat and cause odours).

It is recommended that you burn your gas fireplace or stove for a minimum of four hours at a time with the fan off (if a fan is present) after the curing of the paint has been completed. These odours can last upward to 40 hours of burn time; keep burning at a minimum of four hours per use until odours dissipate.

Noise coming from the fireplace?

Noise is caused by the expansion and contraction of metal as the appliance heats up and cools down. This is normal and is similar to the sounds produced by a furnace or heating duct. This noise does not affect the operation or longevity of your fireplace.

Operating Instructions

1. Be sure to read and understand all the instructions in this manual before operation of appliance.
2. Ensure all wiring is correct and properly enclosed to prevent possible shock.
3. Check for gas leaks.
4. Make sure the glass door is properly installed before operation. Never operate the appliance with the glass door removed.
5. Make sure venting and termination cap are installed and unobstructed.
6. If brick or porcelain liners are used, ensure they are installed.
7. Verify that the pilot can be seen when lighting the appliance. If not, the log or rock placement is incorrect.
8. If the unit is turned off, you must wait a minimum of 60 seconds before re-lighting it.

Mountain View Hearth Products | manuals.stove-parts-unlimited.com

Table of Contents

Glass Orientation..... 2
Pre-installation Questions and Answers..... 3
Operating Instructions..... 3
Table of Contents..... 4
Mobile Home/Manufactured Housing Installation..... 5
Warnings, Installations, and Operations..... 6
Installation Requirements for the Commonwealth of Massachusetts..... 7
Unit Identification..... 8
Heat Output..... 8
Unpacking The Insert..... 8
Clearances..... 8
Electrical Connections..... 8
Gas Piping..... 9
Venting..... 9-10
Installation..... 11
LOGC5 Or Logf5 Placement Guide..... 12
LOGC6 Placement Guidelines..... 13
Burner System Maintenance..... 14
VFI30 Conversion Kit Instructions – PART A..... 14-15
Gas Conversion for Top Convertible Pilot (Series 019065X) – PART B..... 16
Gas Conversion for Modulator – PART C..... 17
Field Conversion for ZDV6000 - VFI25 / VFI30..... 18
Combustion Air..... 19
Unit Operation & Check-Out..... 19
Check-Out..... 20
Unit Adjustment..... 20
Maintenance..... 21-22
Bay Window Installation..... 22
Bay Window..... 23
Surround and Brass Trim Assembly Instructions..... 24
Surround Kit Parts List..... 25
Typical Venting Diagram..... 25
Wiring Diagram - for SIT Valve System..... 26
Wiring Diagram For Robert Shaw Valve System..... 27
Accessory List..... 28-29
Replacement Parts..... 30-31
Millivolt System, Lighting, and Burner Control..... 32
-Glass Safety- All Units..... 33
Limited Lifetime Warranty..... 34

Mountain View Hearth Products
manuals.stove-parts-unlimited.com

Mountain View Hearth Products | manuals.stove-parts-unlimited.com

Mobile Home/Manufactured Housing Installation

This Vent System Appliance must be installed in accordance with the manufacturer's installation instructions and the Manufactured Home Construction and Safety Standard Title 24 CFR, Part 3280, or the current Standard for Fire Safety Criteria for Manufactured Home Installation, Sites, and Communities ANSI/NFPA 501A, and with CAN/CSA Z240 MH Mobile Home Standard in Canada.

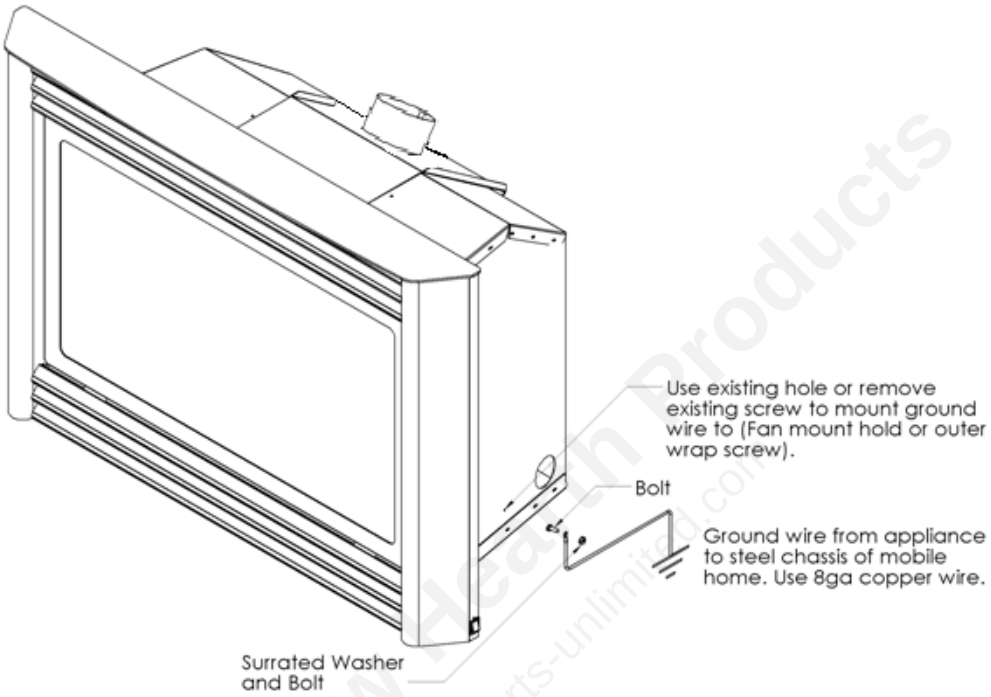

THIS APPLIANCE MAY BE INSTALLED IN MANUFACTURED (MOBILE) HOMES AFTER FIRST SALE.

Please follow the current ANSI/NFPA 70 National Electrical Code in the USA and CAN/CSA C22.1 Canadian National Electrical Code in Canada.

An appliance must be grounded to the steel chassis of the home with 8ga. copper wire using a serrated or star washer to penetrate paint or protective coating to insure grounding.

Use carriage bolt at the attachment point (see diagram above) to secure the appliance to the floor.

Bedroom approved.

Warning: Do not compromise the structural integrity of the manufactured home wall, floor or ceiling, during installation of appliance or venting.

For required venting components see venting installation in appropriate section of this manual.

Mountain View Hearth Products | manuals.stove-parts-unlimited.com

Warnings, Installations, and Operations

Installation Regulations

This gas appliance must be installed by a qualified installer in accordance with local building codes, or in the absence of local codes, with the current CAN/CGA-B149.1 or .2 Installation Code (in Canada) or the current National Fuel Gas Code Z223.1 when installed in the United States.

This appliance, when installed, must be electrically connected and grounded in accordance with local codes, or in the absence of local codes, with the current CSA C22.1 Canadian Electrical Code or with the national Electrical Code; ANSI/NFPA 70-1987 when installed in the United States.

Thermostats are not permitted for vented (Decorative) gas fireplaces installed in the U.S.A.

WARNING

FOR SAFE INSTALLATION AND OPERATION OF YOUR GAS FIREPLACE PLEASE NOTE THE FOLLOWING:

1. Do not clean when the glass is hot.
2. Do not use abrasive cleaners.
3. Using a substitute glass will void all product warranties.
4. For safe operation, glass doors must be closed.
5. When purging the gas line, the glass front must be removed.
6. Do not strike or abuse glass. Take care to avoid breakage.
7. Do not alter gas orifice.
8. No substitute materials may be used other than factory supplied components.

WARNING

HOT GLASS WILL CAUSE BURNS

DO NOT TOUCH GLASS UNTIL COOLED.

NEVER ALLOW CHILDREN

9. This appliance gives off high temperatures and should be located out of heavy traffic areas and away from furniture and draperies.
10. Children and adults should be alerted to the hazards of the high surface temperatures of this appliance and should stay away to avoid burns or ignition of clothing.
11. Young children should be carefully supervised when they are in the same room as the appliance. Toddlers, young children and others may be susceptible to accidental contact burns. A physical barrier is recommended if there are at risk individuals in the house. To restrict access to a fireplace or stove, install an adjustable safety gate to keep toddlers, young children and other at risk individuals out of the room and away from hot surfaces.
12. Under no circumstances should any solid fuels (wood, paper) be used in this appliance.
13. Under no circumstances should this appliance be modified. Any parts that have to be removed for servicing should be replaced prior to operating this appliance.
14. Any safety screen or guard removed for servicing an appliance must be replaced prior to operating the appliance.
15. Installation and repair should be done by a qualified service person. The appliance should be inspected before use and at least annually by a professional service person. More frequent cleaning may be required due to excessive lint from carpeting, bedding material, et cetera. It is imperative that control compartments, burners and circulating air passageways of the appliance be kept clean. Make sure that the gas valve and pilot light are turned off before you attempt to clean this unit.
16. Clothing or other flammable material should not be placed on or near the appliance. This appliance should not be used as a drying rack for clothing nor should Christmas stockings or decorations be hung from it.
17. Do not use this heater if any part has been under water. Immediately call a qualified service technician to inspect the heater and to replace any part of the control system and any gas control which has been under water.
18. Do not operate appliance unless completely installed as per installation instructions.
19. Failure to position the parts in accordance with these diagrams or failure to use only parts specifically approved with this appliance may result in property damage or personal injury.
20. Do not operate appliance with the glass front removed, cracked or broken. Replacement of the glass should be done by a licensed or qualified service person.
21. The front of the fireplace gives off high temperatures that could ignite combustible material which is kept close to the front of the unit.
22. Ensure that power to the Fireplace is turned off before servicing.
23. Do not operate this Fireplace without the glass front or with a broken glass.
24. Improper installation, adjustment, alteration, service or maintenance can cause injury or property damage. Refer to the owner's information manual provided with this appliance. For assistance or additional information consult a qualified installer, service agency, or the gas supplier.
25. Operation of this appliance when not connected to a properly installed and maintained venting system or tampering with the blocked vent shutoff system can result in carbon monoxide (CO) poisoning and possible death.
26. This appliance is equipped with a three-prong (grounding) plug for your protection against shock hazard and should be plugged directly into a properly grounded three-prong receptacle. Do not cut or remove the grounding prong from this plug.

Mountain View Hearth Products | manuals.stove-parts-unlimited.com

- Gas fired appliances may be used only for supplemental heat and/or decorative purposes and under no circumstances shall they provide a primary heat source.
- If the factory-built fireplace has no gas access hole(s) provided, an access hole of 1.5in [37.5mm] or less may be drilled through the lower sides or bottom of the firebox in a proper workmanship like manner. This access hole must be plugged with non-combustible insulation after the gas supply line has been installed.
- Cutting any sheet-metal parts of the fireplace, in which the gas fireplace insert is to be installed, is prohibited.
- This appliance must not be connected to a chimney flue serving a separate solid-fuel burning appliance.
- Installer must mechanically attach the supplied label to the inside of the fireplace into which the gas fireplace insert is installed.

Warning: This fireplace has been converted for use with a gas fireplace insert only and cannot be used for burning wood or solid fuels unless all original parts have been replaced, and the fireplace re-approved by the authority having jurisdiction.

NOTE: It is recommended that a Carbon Monoxide (CO) Detector be installed in or near bedrooms and on all levels of your home. Place a detector about 15ft [4.5m] outside the room that houses your gas appliance.

Certified for installation in a bedroom or bed/sitting room. In Canada must be installed with listed millivolt thermostat (Thermostats are not permitted for vented [Decorative] gas fireplaces installed in the U.S.A.). In USA see local codes.

Operations and Maintenance Instructions

For safe installation and operation note the following:

- The Burner/Log Assembly has been engineered and permanently adjusted for proper flame control.
- Periodically remove the logs from the grate assembly and vacuum any loose particles from the grate and burner areas. See Log Placement page to remove logs. Vacuum burner parts and replace logs.
- Never use your gas fireplace as a cooking device.
- Label all wires prior to disconnection when servicing controls. Wiring errors can cause improper and dangerous operation. Verify proper operation after servicing.

Installation Requirements for the Commonwealth of Massachusetts

In the Commonwealth of Massachusetts, the installer or service agent shall be a plumber or gas fitter licensed by the Commonwealth.

When installed in the Commonwealth of Massachusetts or where applicable codes; the unit shall be installed with a CO detector per the requirements listed below.

1. For direct-vent appliances, mechanical-vent heating appliances or domestic hot water equipment, where the bottom of the vent terminal and the air intake is installed below four feet above grade the following requirements must be satisfied:

- **A.** If there is not one already present, on each floor level where there are bedroom(s), a carbon monoxide detector and alarm shall be placed in the living area outside the bedroom(s). The carbon monoxide detector shall comply with NFPA 720 (2005 Edition).
- **B.** A carbon monoxide detector shall be located in the room that houses the appliance or equipment and shall:
  - Be powered by the same electrical circuit as the appliance or equipment such that only one service switch services both the appliance and the carbon monoxide detector;
  - Have battery back-up power;
  - Meet ANSI./UL 2034 Standards and comply with NFPA 720 (2005 Edition); and
  - Have been approved and listed by a Nationally Recognized Testing Laboratory as recognized under 527 CMR.
- **C.** A Product-approved vent terminal must be used, and if applicable, a Product-approved air intake must be used. Installation shall be in strict compliance with the manufacturer's instructions. A copy of the installation instructions shall remain with the appliance or equipment at the completion of the installation.
- **D.** A metal or plastic identification plate shall be mounted at the exterior of the building, four feet directly above the location of vent terminal. The plate shall be of sufficient size to be easily read from a distance of eight feet away, and read "Gas Vent Directly Below".

2. For direct-vent appliances, mechanical-vent heating appliances or domestic hot water equipment where the bottom of the vent terminal and the air intake is installed above four feet above grade the following requirements must be satisfied:

- **A.** If there is not one already present, on each floor level where there are bedroom(s), a carbon monoxide detector and alarm shall be placed in the living area outside the bedroom(s). The carbon monoxide detector shall comply with NFPA 720 (2005 Edition).
- **B.** A carbon monoxide detector shall:
  - Be located in the room that houses the appliance or equipment;
  - Be either hard-wired or battery powered or both; and
  - Shall comply with NFPA 720 (2005 Edition).

A Product-approved vent terminal must be used, and if applicable, a Product-approved air intake must be used. Installation shall be in strict compliance with the manufacturer instructions. A copy of the installation instructions shall remain with the appliance or equipment at the completion of the installation.

For the state of Massachusetts a **T-handle gas shut-off valve** must be used on a gas appliance. This T-handle gas shut-off valve must be listed and approved by the state of Massachusetts. This is in reference to the state of Massachusetts state code CMR238.

Mountain View Hearth Products | manuals.stove-parts-unlimited.com

1. UNIT IDENTIFICATION

Vented Fireplace Insert (VFI30N or VFI30LP). This unit is offered with variable speed fan and variable gas input.

VFI30N (NATURAL GAS)

(0- 4500ft)	Output BTU/HR	
Input BTU/HR	Fan "OFF"	Fan "ON HI"
Max 30,000	22,200	23,400
Min 20,000	14,800	15,600

Air Shutter .156 Orifice #36

VFI30LP (PROPANE/LP)

(0- 4500ft)	Output BTU/HR	
Input BTU/HR	Fan "OFF"	Fan "ON HI"
Max 30,000	22,800	24,300
Min 22,000	16,720	17,820

Air Shutter .500 Orifice #52

MINIMUM FIREPLACE OPENING

WIDTH	**29"**	**(73.7 cm)**
HEIGHT	**20¾"**	**(52.7 cm)**
DEPTH	**16½"**	**(41.9 cm)**

2. HEAT OUTPUT

It must be remembered that both the units in this manual produce significant amounts of heat within a varying input range.

3. UNPACKING THE INSERT

The unit has been packaged to ensure that the fireplace remains undamaged during regular handling.

It is important to inspect the packaging for signs of damage that may have affected the unit.

Included with the fireplace is the following:
(1) fireplace insert
(1) ceramic glass panel (fragile)
(1) draft hood
(1) installation instructions

With each insert the following must be purchased:
(1) Log Set (4 pce) Cast or Fibre
(1) Standard Surround Kit
(1) Grill Kit

For a list of options please see page 28-31 and contact your local dealer.

4. CLEARANCES

This fireplace was designed for installation in a solid fuel fireplace that has been installed in accordance with National, Provincial/State and Local building codes and is constructed of non-combustible materials. DO NOT remove any refractory materials from any **masonry** solid fuel fireplace. For installation in **zero clearance** type listed solid fuel burning factory built fireplaces, it may be necessary to remove the damper plate and refractory liners. Removal of the smoke baffle is necessary in most cases.

Clearance from the front of the unit to a combustible floor is 0.15 metres(6 inches).

Clearance from adjacent side wall is 7 inches from side of unit.

- Minimum clearances from the top of the grill to a mantel and maximum mantel width are:

MANTEL WIDTH	HEIGHT ABOVE GRILL OPENING
A 7"(17.8cm)	13"(33.0cm)
B 6"(15.3cm)	12"(30.5cm)
C 5"(12.7cm)	11"(27.9cm)

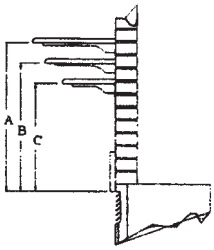

5. ELECTRICAL CONNECTIONS

The blower for the fireplace insert comes pre-wired from the factory all that is needed is to plug in to 120 volt supply.

Fan Temperature Sensor
The wiring harness has two wire ends that must be attached to the Temperature Sensor. The Temperature Sensor is mounted underneath the burner, attached by two screws securing the thermodisc to the bottom of the burner.
(See page 26 for drawing assembly of SIT Wiring Diagram).

NOTE: MAKE SURE THE WIRE HARNESS IS ROUTED AGAINST THE SURROUND, NOT THE SIDE OF THE FIREPLACE.

Mountain View Hearth Products | manuals.stove-parts-unlimited.com

Thermostat Connection and On/Off Switch Millivolt Thermostat (optional but recommended). All controls are connected directly to the gas valve and the circuit is made between:

- Robertshaw Valve **TH** and **TP- PG**
- SIT Valve **TH** and **TP-TH**

See Section 18 SIT Wiring Diagram

6. GAS PIPING

All gas piping must be done in accordance with all applicable codes CAN./CGA-BI49.1 or installation codes or ANSI -Z223.1 as well as local codes.

The appliance and its individual shutoff valve must be disconnected from the gas supply piping system during any pressure testing of that system at test pressures in excess of 1/2 psig (3.5 kPa).

The appliance must be isolated from the gas supply piping system by closing its individual manual shutoff valve during any pressure testing of the gas supply piping system at test pressures equal to or less than 1/2 psig (3.5 kPa).

The gas line to the fireplace insert should be of adequate size to minimize the pressure drop and should never be smaller than that supplied with the valve. A ground joint union should be used as close to the valve as possible to facilitate removal of the gas valve and burner base pan.

Check that the gas piping is not supported by the gas valve. A manual shut-off valve should be installed in the gas line, inside the fireplace. All piping joints must be tight and an approved non-hardening sealing compound shall be used (one which is suitable for future service).

For the state of Massachusetts a **T-handle gas shut-off valve** must be used on a gas appliance. This T-handle gas shut-off valve must be listed and approved by the state of Massachusetts. This is in reference to the state of Massachusetts state code CMR238.

CAUTION: Never use a flame to check for leaks - use an approved leak test solution.

7. VENTING

Before any vent liner is run through a masonry chimney or other approved venting system the **chimney must be inspected. cleaned and repaired** if necessary . A chimney which was used for a solid fuel fireplace must be professionally cleaned in order to reduce corrosion of the vent and other possible safety hazards.
This fireplace insert is approved for use with a 4” inch diameter pipe.

VENT LENGTH (4” Diameter Vent)

	Vertical (rise)	Horizontal (run)
Min	l0 ft - 3.1m	0 ft - 0.0 m
Max	50 ft - 16.2 m	2 ft - 0.6 m

All venting lining products must be approved and installed according to the vent manufactures installation instructions. All vent liners must terminate in a rain cap to prevent debris and rain from entering the vent and possibly damaging the appliance or creating an unsafe condition. The area between the existing chimney and liner must be capped off for the same reasons as above and to reduce the chances of venting problems and corrosion of the vent.

It is strongly recommended that the area between the damper and the liner be blocked to prevent the possibility of flue products entering the area between the chimney and the vent liner.

This heater must be properly connected to a venting system. This heater is equipped with a vent safety spill switch shutoff system.

WARNING

Operation of this heater when not connected to a properly installed and maintained venting system or tampering with the vent safety spill switch shutoff system can result in carbon monoxide (CO) poisoning and possible death.

If this fireplace insert is to be used to replace an existing fireplace insert the existing vent liner must be of the proper size and if so it must be inspected for obstructions, damage and/or corrosion. Replacement must be done as necessary .

NOTE: Follow vent manufacturer’s installation instructions.

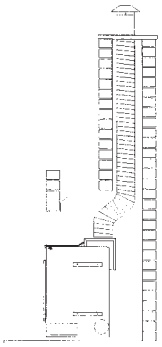

Mountain View Hearth Products | manuals.stove-parts-unlimited.com

When installing the venting please take note of the following:

1. A masonry chimney or other approved venting system must be clean and inspected for any damage which might make it unsafe. Chimney must be constructed of non-combustible material.

2. Any chimney clean-outs must be tight fitting as to minimize air leaks into the chimney.

3. Any flue damper must be blocked open or removed to provide a minimum opening of 13 square inches and must not distort the liner.

4. The liner is to be inserted from the top of the chimney and through the damper opening.

5. The draft hood is to be removed from the fireplace insert and attached to the liner using (3) sheet metal screws and a clamp **(See Figure 1)**. It may not be necessary to remove the draft hood if there is sufficient space in the solid fuel fireplace to attach the liner with the draft hood in place 24" is required.

6. If the lintel is wider than 12" (305mm) then the height of the solid fuel fireplace must be at least 28" (711mm) to allow for an offset elbow. **(See Figure 2). If providing an offset, do not collapse the flex pipe. This will restrict the vent and cause a red flame which will produce soot on glass.**

7. If however the draft hood must be removed then it must first be attached to the liner using four (4) sheet metal screws and a clamp. The fireplace insert can then be slid into place and the draft hood should be located so that the screw on the locating bracket mates with the hole on the top centre front of the insert. The locating bracket should be pulled as far forward as it will go and be bolted into place (a flashlight should be used to confirm that the draft hood is flat on the top of the unit). Once the draft hood is in place a long screw driver or piece of rod must be used to rotate the locking brackets so that the lock over top the flanges on the side of the draft hood. **(See Figure 3)**

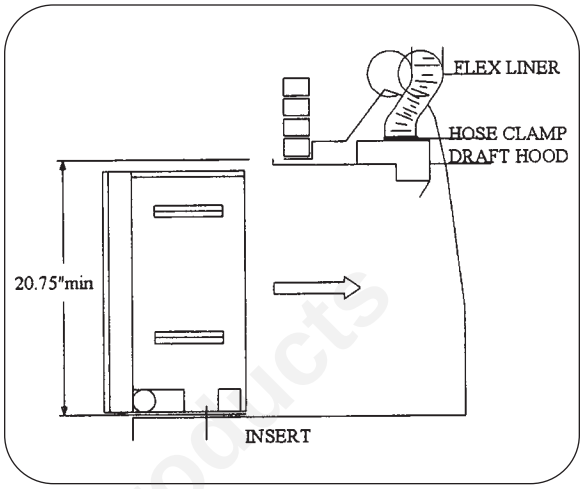

(Figure 1)

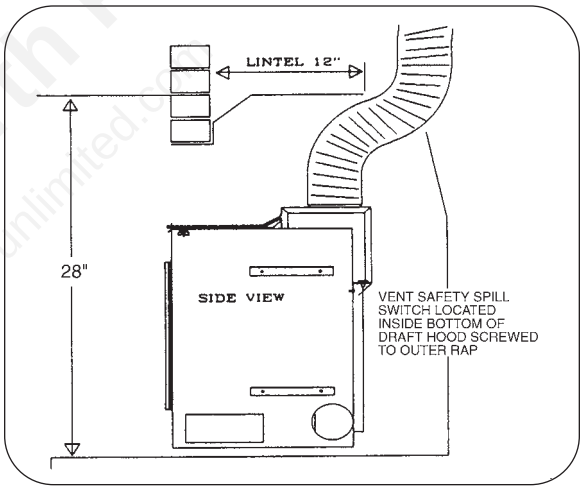

(Figure 2)

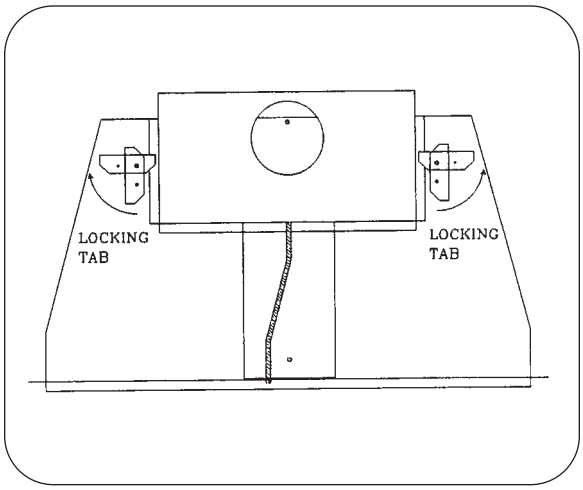

(Figure 3)

Mountain View Hearth Products
manuals.stove-parts-unlimited.com

Mountain View Hearth Products | manuals.stove-parts-unlimited.com

8. INSTALLATION

NOTE: INSTALLATION AND REPAIR SHOULD BE PERFORMED BY A QUALIFIED SERVICE PERSON. THE APPLIANCE SHOULD BE INSPECTED BEFORE USE AND AT LEAST ANNUALLY BY A PROFESSIONAL SERVICE PERSON. MORE FREQUENT CLEANING MA Y BE REQUIRED DUE TO EXCESSIVE LINT FROM CARPETING, ETC. IT IS IMPERATIVE THAT THE CONTROL COMPARTMENT, BURNING AND CIRCULATING AIR PASSAGEWAYS OF THE APPLIANCE BE KEPT CLEAN.

Install the fireplace insert in the following order:

1. Clean and inspect chimney.
2. Plan layout of gas line.
3. Plan layout of electrical.
4. Install the chimney liner as instructed in SECTION 9.
5. Clean out and vacuum the solid fuel fireplace. **Make sure that the fireplace is completely cool and has not been used for a few days.**
6. Make sure that the solid fuel fireplace base is level and if not make any necessary adjustments.
7. Slide unit into place attaching draft hood and or chimney liner as required.
8. Hook up gas line.
9. Hook up electrical.
10. Remove glass by removing two screws behind upper grill and lifting door off bottom door retainer (glass is very fragile).
11. Log Installation:
    - Remove logs from carton (4) and inspect.
    - Install as per Log Placement Guidelines and set ups.
    - Purge lines and test pilot operation.
12. Ember Kit Instructions:
    Spread supplied rock evenly on the bottom of the fireplace (DO NOT PLACE ROCK ON BURNERS), next tear ember wool into small thin pieces and place evenly over front burner .
13. Re-install the glass door.
14. Check for correct operation (See SECTION 10)
15. Install Surround and Grills as per instructions.
16. Gas fired appliances may be used only for supplemental heat and/or decorative purposes and under no circumstances shall they provide a primary heat source.

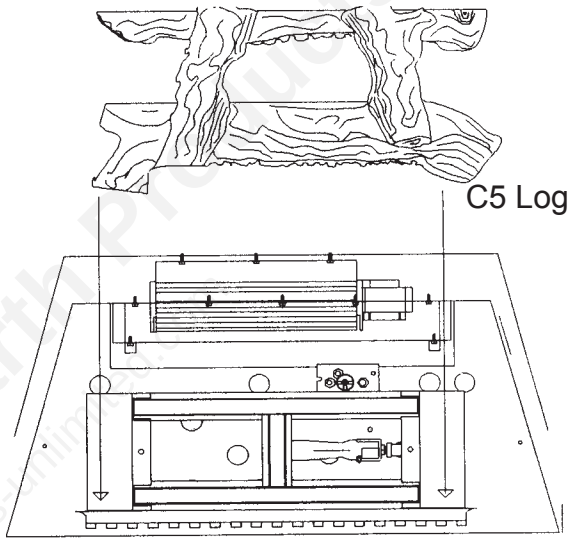

(Figure 4)

NOTE: DO NOT BLOCK THE SIDES OR TOP OF THE APPLIANCE AS THIS WILL AFFECT THE PROPER AND SAFE OPERATION OF THE UNIT.

Mountain View Hearth Products | manuals.stove-parts-unlimited.com

LOGC5 OR LOGF5 PLACEMENT GUIDE

C5 or F5 Parts

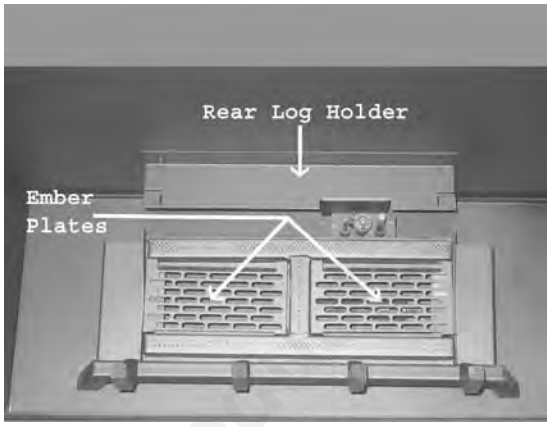

Burner

Step 1: Break ember wool into thumbnail size pieces. Place glowing embers evenly on to the front burner tube as shown.

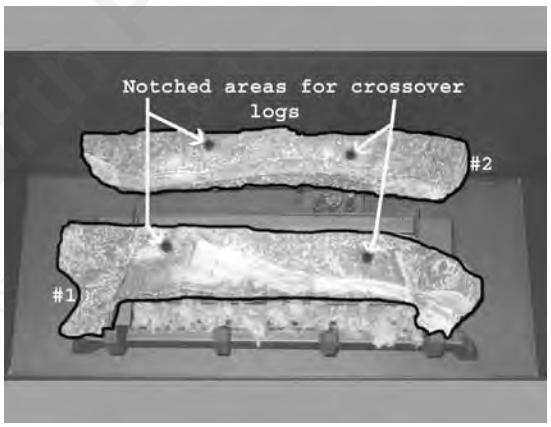

Step 2: Place Log #1 on burner as shown and pull forward to the grate bars. Place log #2 on rear log holder and center it.

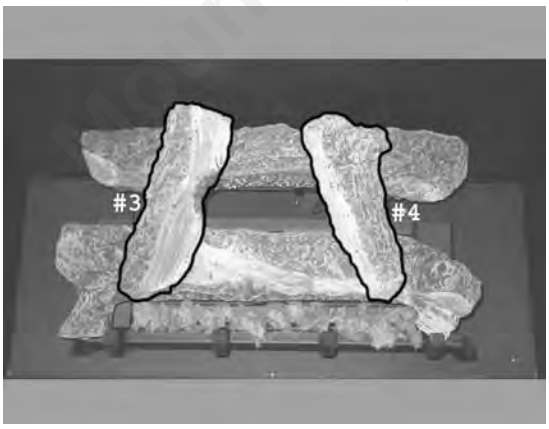

Step 3: Place Log #3 onto the notched areas as shown. Place Log #4 onto the notched areas as shown. (Refer to step 2 for notched area locations).

Step 4: Place lava rock around the sides and the front of the burner as shown. Sprinkle vermiculite over top of the lava rock as shown. (Do not place lava rock or vermiculite on the burner tube areas).

Mountain View Hearth Products | manuals.stove-parts-unlimited.com

LOGC6 PLACEMENT GUIDELINES

Log C6 Parts List

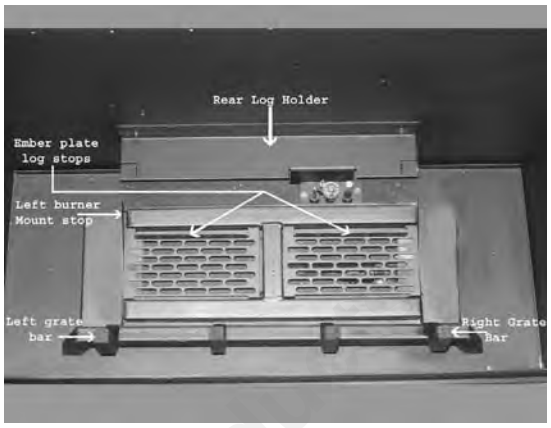

Burner

Step 1: Place Log #1 on rear log holder, center it, and push back. Place Log #2 against the left burner mount and back against the ember plate log stop as shown. (Log must not impinge on main flame pattern).

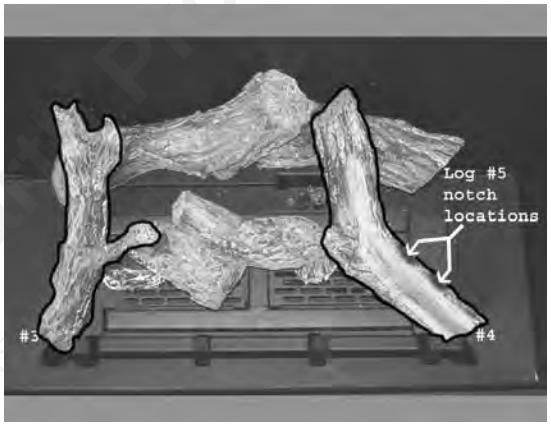

Step 2: Place Log #3 onto the left notch of Log #1 and against the left grate bar as shown. Place Log #4 onto the right notch of Log #1 and against the right grate bar as shown.

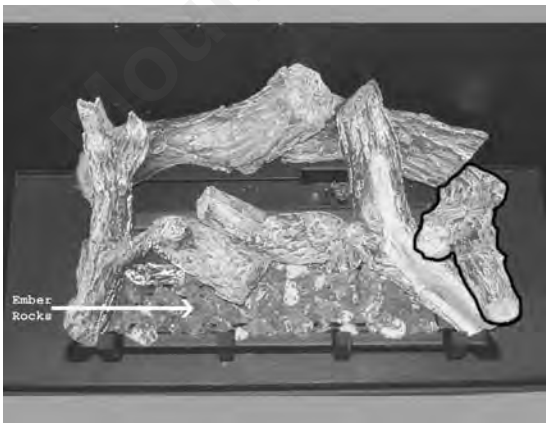

Step 3: Place Log #5 on the notched locations of Log #4. (Refer to step 2 for Log #5 notch locations). Fill the exposed areas of the ember plates and front burner tube with ember rocks. (Do not place ember rocks on rear burner tube).

Step 4: Place lava rock around the sides and front of the burner. Sprinkle the vermiculite over top of the lava rock. (Do not place lava rock and vermiculite on burner or ember plates).

Mountain View Hearth Products | manuals.stove-parts-unlimited.com

Burner System Maintenance

It is recommended to annually inspect and clean the Burner System to prevent malfunction and / or sooting. This operation should be performed by your dealer or a qualified technician.

⚠-CAUTION-

Before servicing the burner system ensure that the gas supply is turned OFF and disconnect all electrical connections to the appliance. Allow the appliance to cool to room temperature. Note that the pilot assembly may be hot in an intermittent or standing-pilot system—even if the main burner was never on. Exercise caution when working within the area.

-ALL WORK SHOULD BE PERFORMED BY A QUALIFIED AND CERTIFIED TECHNICIAN-

Monthly Flame Inspection

It is recommended to turn on the unit at least once a month and inspect the flame pattern to ensure there are no problems with the burner tube. The pilot flame should also be inspected monthly to ensure proper operation.

Flame should appear similar to the above picture.

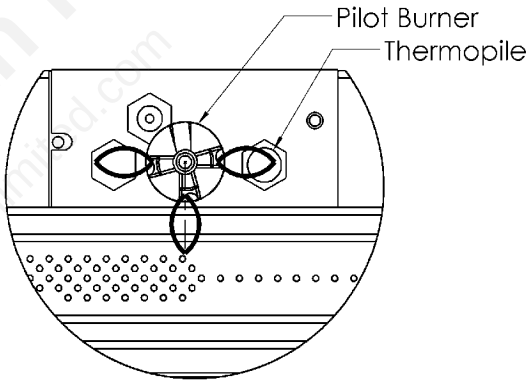

Pilot Must Maintain
This Relationship
With Burner Tube.

VFI30 Conversion Kit Instructions – PART A

Kit Number	Description	Pilot Orifice	Burner Orifice Brass (1000-255)	Brass Nipple	Air Shutter	Hi/Lo Regulator
30VFI-CKLP	LP Conversion -Millivolt-	1001-P167SI **#30** (977.167)	#52	1000-253closed	.500”	1001-P202SI (0.907.202)
30VFI-CKNG	NG Conversion -Millivolt-	1001-P165SI **#51** (977.165)	#36	1000-253closed	.156”	1001-P201SI (0.907.201)
Refer to “**Gas Specifications Chart**” for inlet pressures and input ratings. Clock meter to verify input rate. Place conversion label as close to converted gas control as possible. Refer to lighting instructions to verify the normal operating sequence of the ignition system.						

Mountain View Hearth Products | manuals.stove-parts-unlimited.com

VFI25/VFI30 Conversion Kit Instructions – PART A

Caution: The gas supply shall be shut off prior to disconnecting the electrical power, before proceeding with the conversion.

WARNING: This conversion kit shall be installed by a qualified service agency in accordance with the manufacturer's instructions and all applicable codes and requirements of the authority having jurisdiction. If the information in these instructions is not followed exactly, a fire, explosion or production of carbon monoxide may result causing property damage, personal injury or loss of life. The qualified service agency is responsible for the proper installation of this kit. The installation is not proper and complete until the operation of the converted appliance is checked as specified in the manufacturer's instructions supplied with the kit.

IMPORTANT: Always check for gas leaks with a soap and water solution. DO NOT USE OPEN FLAME FOR LEAK TESTING.

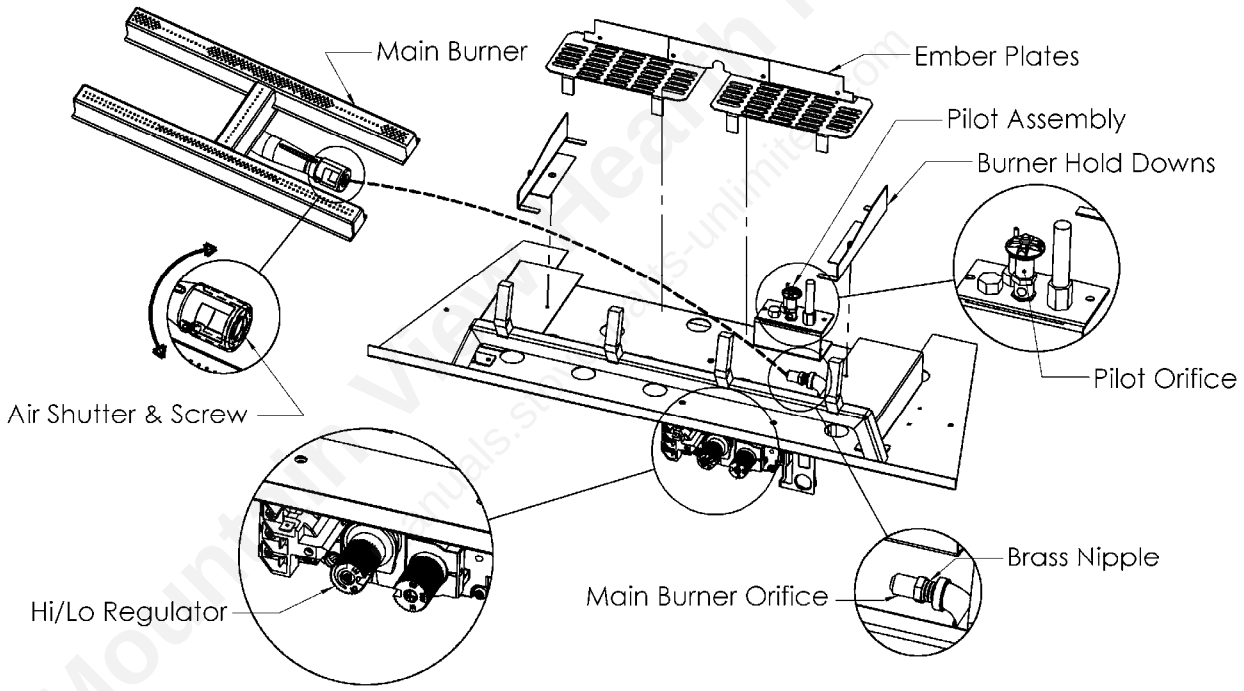

1. Lift ember plates out of burner area. Remove screws from burner hold downs. Slide main burner to the left, and lift out of fireplace insert.
2. Adjust the Air Shutter to the correct Primary Air setting as specified in the manual or on the label plate. To adjust the Primary Air setting, loosen screw on the side of the Air Shutter and rotate to the correct opening using a drill bit or tape measure. Retighten screw.
3. Remove the Main Orifice using a ½" wrench and replace with the new Conversion Orifice which came with the Conversion Kit.
4. Replace the Burner Tube. Install the new Pilot Orifice (See **Pilot Conversion**) and Hi/Lo valve regulator by following instructions supplied with the Conversion Kit.

Mountain View Hearth Products | manuals.stove-parts-unlimited.com

Gas Conversion for Top Convertible Pilot (Series 019065X) – PART B

Instructions for converting SIT 190 series pilot burner injection from NG to LPG and from LPG to NG only. This information should be considered as supplemental to the Appliance Manufacturer's Instructions.

⚠ WARNING: The installation of this conversion kit must only be undertaken by a qualified and certified gas appliance installer.

1. Shut off the gas supply to the appliance.
2. Allow the pilot burner to cool to room temperature. **WARNING: Touching a hot pilot burner can result in injury.**
3. The pilot hood is held in place by spring pressure. Remove the hood by pulling it directly up from the pilot bracket (a).
4. Insert a 5/32" or 4mm Allen wrench into the hexagonal key-way of the injector (b), and rotate it ↺ counter-clockwise until it is free of the injector journal (c).
5. Verify that the new injector is proper for the application. The injector size is stamped on the side of the injector near the top. LPG injectors have a groove machined around their circumference near the top, while NG injectors do not have a groove (e). Refer to the Appliance Manufacturers instruction sheet for the proper injector size.
6. Insert the Allen wrench into the end of the injector. Then, insert into injector journal, and rotate the injector clockwise until a torque of 9 in-lbs is achieved.
7. Replace the pilot hood by aligning the tab on the base of the hood with the slot in the side of the pilot journal, and push the hood down, directly onto the pilot bracket (d). The hood must sit squarely on the bracket for proper operation. Check to insure that the hood is properly seated onto the pilot bracket.

(a)

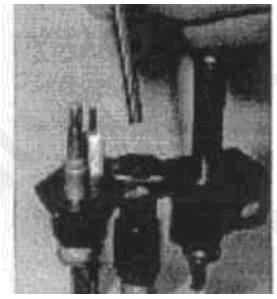

(b)

(c)

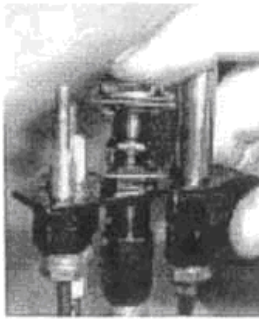

(d)

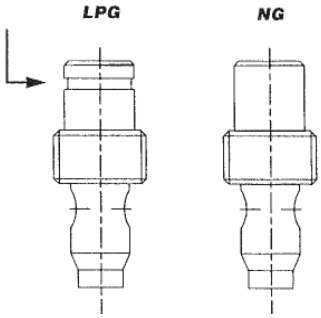

(e)

SIT Group

⚠ WARNING: This conversion kit must only be applied as part of a conversion kit supplied by the appliance Manufacturer for the specific appliance, and type of gas being converted.

INSTALLER NOTICE: These instructions must be left with appliance.

Mountain View Hearth Products | manuals.stove-parts-unlimited.com

installationinstructions

7 252 136

820 NOVA mV

Modulating Conversion Kit

WARNING!
The installation of this conversion kit must only be undertaken by a qualified and certified gas appliance installer.

MODULATING PRESSURE REGULATOR CONVERSION KIT INSTALLATION OR REPLACEMENT INSTRUCTIONS.

1 *Turn control knob to the OFF position, and shut off the gas supply to the valve.*

2 *Using a Torx T20, or slotted screwdriver, remove and discard the three pressure regulator mounting screws (A), pressure regulator tower (B), and the spring and diaphragm assembly (C) . (If applicable)*

3 *Insure that the rubber gasket (D) is properly positioned and install the new modulating pressure regulator assembly to the valve using the new screws (E) supplied with the kit. Tighten screws securely. (Reference torque = 25 In.Lb.)*

4 *Install the enclosed identification label (F) to the valve body where it can be easily seen.*

5 *Apply gas to system and re-light appliance according to manufacturers instructions.*

6 *With the main burner "ON", test the new pressure regulator assembly for leaks using a soap solution.*

7 *Relight the main burner in both the HI and LO positions, and verify proper burner ignition and operation.*

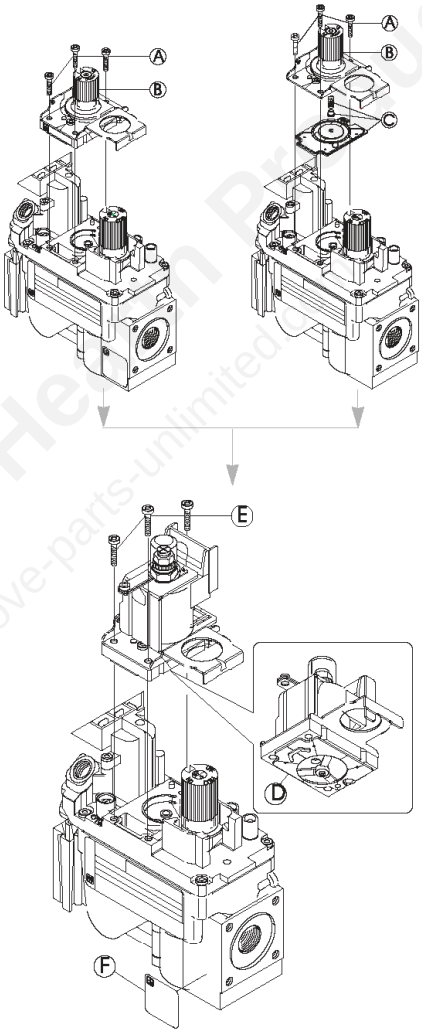

WARNING!
This modulating conversion kit must ONLY be applied as part of a conversion kit supplied by the APPLIANCE MANUFACTURER for the specific appliance, and type of gas, being converted.

INSTALLER NOTICE. These instructions must be left with appliance.

SIT Group

Mountain View Hearth Products | manuals.stove-parts-unlimited.com

Field Conversion for ZDV6000 - VFI25 - VFI30

Warning: Failure to position the parts in accordance with these diagrams or failure to use only parts specifically approved with this appliance may result in property damage or personal injury.

C6GEK: ZDV6000 Conversion
2 - Ember Plates
1 - Ember Plate Bridge
1 - Grate Assembly with 5/8” Bars
4 - 1/2” x 8-18 DT Screws

C30GEK: VFI25 & VFI30 Conversion
2 - Ember Plates
1 - Ember Plate Bridge
1 - Grate Assembly with 1/2” Bars
2 - 1/2” x 8-18 DT Screws

Tools Required: Drill, 1/8” Drill Bit, 1/4” Nut Driver Bit

Step 1: Remove existing grate bar by bending bar slightly forward and drill out rivets.

Step 2: Seal rivet holes with two supplied screws. (ZDV6000 ONLY)

Step 3: Center legs of Grate Bar on either side of burner support and fasten with supplied self drilling Screws. (Ref: 1)

Step 4: Place Ember Plates between burner tubes right and left of Burner.
NOTE: Raised flange of Ember Plates must be to back of Burner.

Step 5: Slide Ember Plate Bridge between Ember Plates. (Ref: 2)

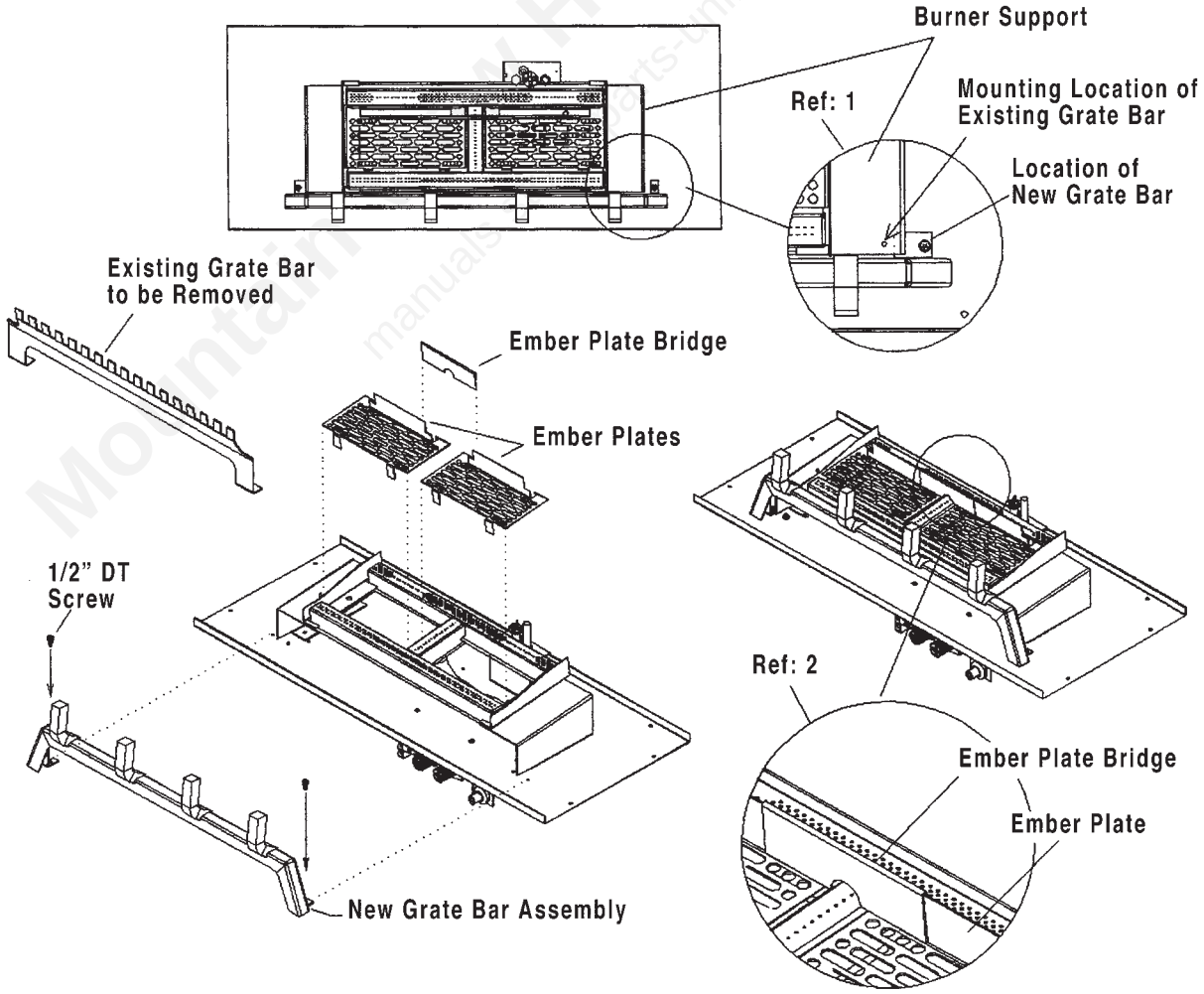

Mountain View Hearth Products | manuals.stove-parts-unlimited.com

9. COMBUSTION AIR

Indoor combustion air must conform to the requirements of the applicable code:

Canada Installation Code CAN/CGA-B149.1 or (USA.) National Fuel Gas Code ANSI-Z223.1

In homes of normal construction, sufficient combustion air can usually be obtained by air infiltration. The fireplace insert must be installed in area that is free of excessive dust and dirt and where ventilation is sufficient to provide proper combustion of gas, proper venting and the maintenance of safe operating temperatures. When infiltration does not provide adequate air for combustion, outside air shall be introduced as specified in the installation codes.

The draft hood must be installed so as to be in the same atmospheric pressure zone as the combustion air inlet to the appliance.

To check if there is adequate air for combustion perform the following procedure: **(See Figure 5)**

1. Close all windows and doors.
2. Turn all exhaust fans on high.
3. Turn on fireplace insert.
4. To check for proper draft action a draft meter with a minimum graduation of 0.01 inches of water column is required. The meter is to be attached to the 1/4 inch aluminum tube originating in the draft hood using high temperature silicone (tubing should not be allowed to contact glass and unit should be allowed to run for a minimum of 10 minutes; area of sensing tube will become quite hot).

   A minimum draft pressure of .02 inches of water column is required to ensure that there is no spillage at the draft diverter. This number was arrived at through testing under various severe conditions, actual vent pressures under normal conditions will be much higher. A draft pressure under .02 will indicate either a blocked vent, down draft, adverse house de-pressurization or improper venting.

If there is not the proper draft then provide outside air as instructed by the applicable code.

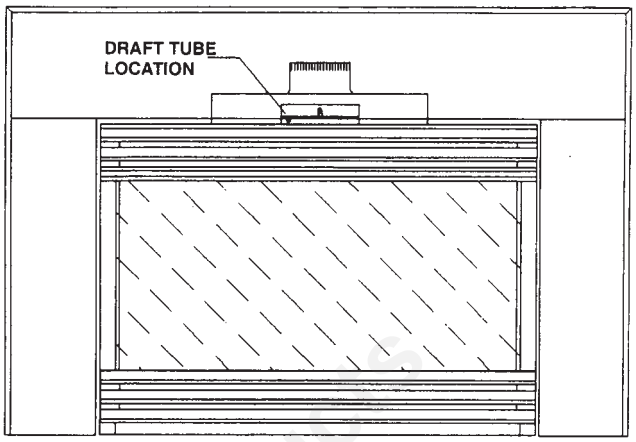

(Figure 5)

NOTE: DO NOT OBSTRUCT FLOW TO THE FRONT OF THE FIREPLACE AS THIS COULD AFFECT COMBUSTION AND BE A FIRE HAZARD. FAILURE TO DO SO COULD RESULT IN PROPERTY DAMAGE, INJURY AND/OR LOSS OF LIFE.

10. UNIT OPERATION & CHECK-OUT

Before trying to light the unit for the first time it is advisable to purge the gas. Once the gas line is purged it is best to wait a few minutes with a few open windows before trying to light the fireplace. For detailed lighting instructions see page 32.

Start-up Instructions:

1. Turn wall switch (or thermostat) to the off position.
2. Turn gas valve to “PILOT” and depress.
3. Press the red spark button repeatedly until a steady pilot flame is present.
4. Keep the “PILOT” position on the gas valve depressed for approximately 45 seconds.
5. Turn gas valve to the on position.

Mountain View Hearth Products | manuals.stove-parts-unlimited.com

Sequence of operation:

1. Turn On/Off switch (or thermostat) to the on (call for heat) position.
2. Main burner lights.
3. If blower variable speed switch is in the "On" position then the blower will turn on automatically once the unit is hot enough.
4. Once the On/Off switch is turned off (or thermostat is satisfied) then the flame will extinguish.
5. Blower will keep on running until the fire place has cooled down.

Shut Down Instructions:

1. Turn On/Off switch (or thermostat) to the off position.
2. Depress gas valve and turn to "OFF" position.

11. CHECK-OUT

Once installed, the unit should be operated at least three (3) times to ensure that all is in working order. NOTE: MANUFACTURING OILS AND PAINT WILL SMOKE DURING INITIAL FIRING OF APPLIANCE. OPEN WINDOWS FOR VENTILATION.

12. UNIT ADJUSTMENT

BEFORE LEAVING, THE INSTALLER SHOULD MAKE THE FOLLOWING CHECKS:

(a) BTU/INPUT / GAS PRESSURE

The fireplace input is marked on the Rating Plate. The gas valve comes factory pre-set to the proper rated pressure and adjustment should not be necessary. If there is any question of input then it may be necessary to check manifold pressure.

Manifold pressure on the S.I.T. Nova valve can be measured by loosening the slotted pressure taps on the front bottom left of the valve. ('E' Inlet Pressure, and 'A' Manifold Pressure) and connecting a manometer .

(b) MAIN BURNER / PILOT

The **pilot flame** size is factory set. The pilot flame should be at least 1.5 inches (4 cm) long. The flame should be impinging on the pilot generator. Pilot size can be adjusted through the pilot adjust screw. If the pilot flame is too small and can not be adjusted through the pilot adjust screw then there is the possibility of dirt in the pilot orifice in which case the pilot orifice should be cleaned or replaced.

Pressure ranges are as listed below:

Gas Supply Pressure (inches w.c.)

	Min	Normal	Max
Natural Gas	4.5	7.0	9.0
L.P. (propane)	10.8	11.0	12.0

Manifold Pressure (inches w .c.)

	Normal(HI)	(LOW)
Natural Gas	3.5	1.6
L.P. (Propane)	10.0	6.3

The unit as shipped is equipped for operation for 0 to 4500 ft.

The **main burner** should be allowed to operate for 15 to 20 minutes before making any adjustment to the unit.

The **air shutter** should never be closed all the way. For **Natural Gas and Liquid Propane** it is recommended that the air shutter be set to Factory Specifications. (See Page 8).
If there is **too much primary air** then the flame will be very blue with yellow tips and smaller flame height.

If there is **too little primary air** then the flame will be yellow with orange/red tips on the back flames with dark sooty elongated tips. In this condition the glass and logs could show signs of soot accumulation within 10 to 20 minutes.

NOTE: With a properly burning flame there will still be a certain level of sooting. It may be necessary to clean the glass up to 3 times during a cold season. The amount of cleaning required depends on the amount that the fire place is used.

Mountain View Hearth Products | manuals.stove-parts-unlimited.com

13. MAINTENANCE

CAUTION: Label all wires prior to disconnection when servicing controls. Wiring errors can cause improper and dangerous operation. Verify proper operation after servicing.

Warning: INSURE THAT POWER IS TURNED OFF TO THE FIREPLACE BEFORE SERVICING.

(a) Blower

This motor has been factory oiled and under normal operating conditions should not require oiling.

Replacement of Blower
Remove glass (two screws behind upper grill), and remove logs. Blower access panel is visible after rear log is removed. Remove the screws (five on top, one on each side) and lift from tabs, blower is then assessable for servicing. Before re-installing blower access panel, apply a bead of sealant Millpac to the bottom edge of panel, (this is to assure blower does not interfere with combustion), and than secure with screws.

(b) Burner/Pilot

The burner should be periodically cleaned by removing any ember material and wiping off and vacuuming the burner pan. At this time it is also recommended to check the burner for any signs of corrosion which might impair its operation and replace it if necessary.

The pilot should also be checked for signs of proper operation and flame. *If replacement of pilot, generator, thermocouple is necessary replace from top and bottom of firebox bottom.*
(Reference lower diagram Page 16)

(c) Logs

CAUTION: The logs can stay hot for several hours after the fireplace is shut off. Serious burns could result. It is recommended that the fireplace be turned off for several hours before cleaning is attempted.

DO NOT wash the logs if they have any accumulation of soot on them. Washing the logs in any sort of solution will just cause the soot to become imbedded in the logs surface.

The best way to clean the logs is to blow off the soot using compressed air at high velocity. It is also effective to use a clean soft brush in the area of soot accumulation. Vacuuming the log with a soft brush will also work but do not forget to carefully wash the brush before using it on anything else. If at all possible clean the logs outside the home away from areas you do not wish the soot to mark.

(d) Firebox and Heat Exchanger

To clean the firebox and heat exchanger use a vacuum. For the firebox it is recommended to use a soft brush on the end of the vacm as not to damage any painted surfaces. The heat exchanger may be more difficult to clean but can still be cleaned with the combination of a small brush and the vacuum.

(e) Glass Cleaning

It will be necessary to clean the glass periodically. During start-up condensation will form, and cause dust and lint to cling to the surface of the glass. Furthermore, the initial burn cures the paint but also leads to the deposit of a filmy residue. It is therfore recommended that the glass be cleaned two or three times, initially, with non-abrasive common household glass cleansers and warm water. After that, the glass can be cleaned two or three times a season depending on use.

Warning and Cautions.
- **Do not clean when the glass is hot.**
- **Do not use abrasive cleaners.**
- **Using a substitute glass will void all product warranties.**
- **Do not strike or abuse glass. Care must be taken to avoid breakage of the glass.**
- **Do not operate this fireplace without the glass front or with a broken glass.**

WARNING Electrical Grounding Instructions

This appliance is equipped with a three prong (grounding) plug for your protection against shock hazard and should be plugged directly into a properly grounded three-prong receptacle. Do not cut or remove the grounding prong from this.

Mountain View Hearth Products | manuals.stove-parts-unlimited.com

Glass Replacement

REPLACEMENT GLASS

Only Robax ceramic or coated NeoCeram glass may be used for replacement. The glass must be a minimum of 5mm thick.

Removal of the Glass Door

1. Remove the door by unscrewing the two (2) top screws of the top channel and loosening the bottom channel.
2. Once the top of the door is unlatched, pull it out wards and up to unlatch the bottom.

3. To re-install, place the bottom door ledge into the lower channel assembly first. Now, swing the door closed to seal it against the firebox cavity. Re-attach the upper channel assembly to secure the door to the appliance. Tighten 4 screws.

4. To replace the class, clean all gasket materials from the door frame. Using a high heat silicone (resistant to 500º [260ºC]) apply a bead of approximately 1/32' to all four sides of the frame and insert the glass with a new gasket. The door frame should be on a flat surface with a small amount of weight pressing the glass into the silicon. Let everythng dry for approximately 15 to 20 minutes. The door can be re-installed by following step 3.

Warning and Cautions.

- **Do not clean when the glass is hot.**
- **Do not use abrasive cleaners.**
- **Using a substitute glass will void all product warranties.**
- **Do not strike or abuse glass. Care must be taken to avoid breakage of the glass.**
- **Do not operate this fireplace without the glass front or with a broken glass.**

(f) Brass Trim and Surround

All Brass and Painted surfaces should only be wiped off with a soft non abrasive damp cloth (a mild dish soap can be used if necessary).

DO NOT use brass or other metal polishes, glass cleaners or any other abrasive cleaners as this will mark and damage brass or painted surfaces.

(g) Venting

Venting should be inspected yearly by a qualified service technician and replaced if necessary . Draft action should be tested for as outlined in Section 9 to conform that conditions in the house have not changed or that the vent has not become blocked or damaged.

h) Valve and Burner Replacement

For valve replacement it is recommended that the burner assembly be removed, this is done by removing two 1/4" hex screws on the left and right side of the firebox and lifting the complete burner assembly from (the unit and replacing defective component and re-installing. Check for gas leaks after replacing burner assembly.

WARNING

The appliance area must be kept clear and free from combustible materials, gasoline and other flammable vapours and liquids.

14. BAY WINDOW INSTALLATION

Follow all installation instructions and testing of the unit before installing Bay Window. Turn unit off and let the unit cool down before installing.

Attach extension knobs (Hi/Lo), (On/Off) to valve. Then slide variable speed and piezo bracket forward by loosening screw and secure.

Attach Bay Window Assembly by inserting clips onto bottom channel and screw into place at top door channel.

NOTE: The Bay Window assembly replaces the upper glass retainer provided with the original unit. Insert flat glass retainer and tighten, making sure glass does not fall forward.

(See Bay Window figure 6 on page 23).

Mountain View Hearth Products | manuals.stove-parts-unlimited.com

Bay Window (Figure 6)

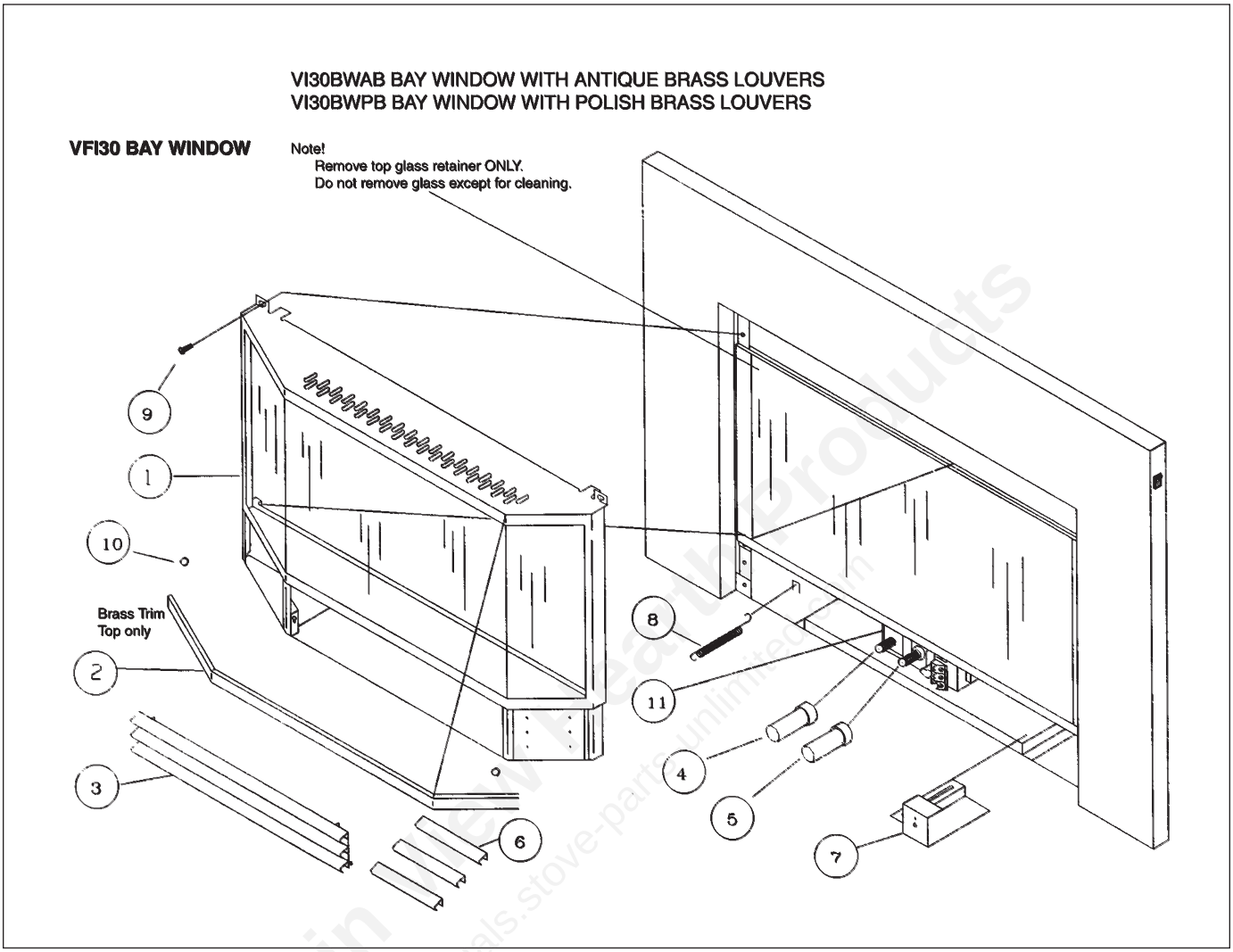

Bay Window Assembly and Parts List:

Ref. No.	Stock No.	Description
1	2000-300	Bay Window Assembly
2	2000-310	Upper Brass Window Trim
3	2000-313	Grill (Bottom)
4	1001-P188SI	On/Off Pilot Extension Knob
5	1001-P189SI	Hi/Lo Extension Knob
6	2000-312	Side Louvers
7	2000-070	Fan/Piezo Bracket
8	5000-P025WS	Extension Spring
9	Misc.	#8-24 Screw
10	1000-309	Magnet
11	1001-P633SI	Valve Nova LP Hi-Lo 0820633
	1001-P634SI	Valve Nova-NG Hi-Lo 0820634
	2000-321	Glass Side - Tempered
	2000-322	Glass Front - Tempered

Mountain View Hearth Products | manuals.stove-parts-unlimited.com

15. Surround and Brass Trim Assembly Instructions

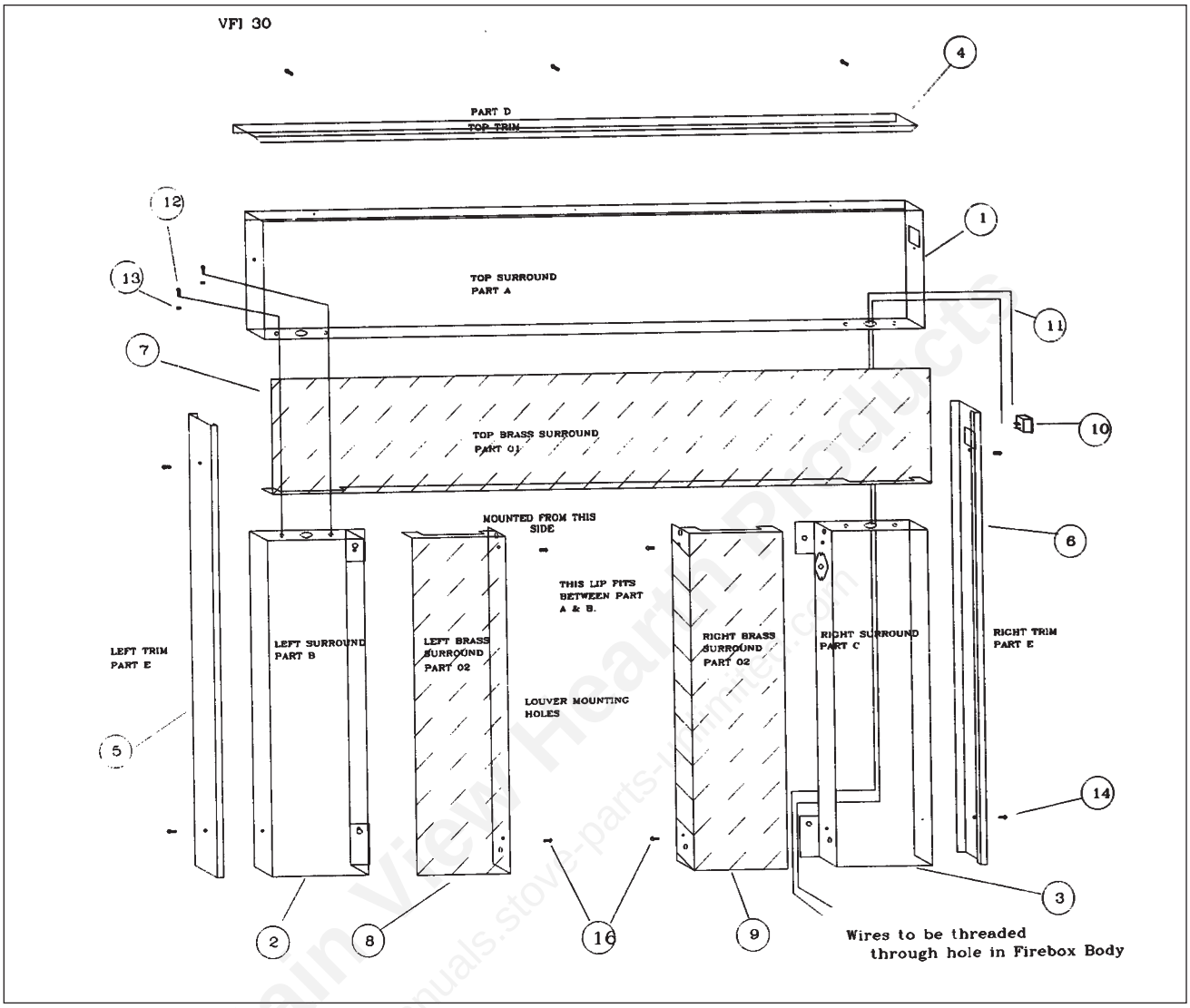

Surround Kit Installation:

1. Before attaching surround assembly, check operation of insert and installation of draft hood and chimney liner .
2. To assemble surround attach panel (1), (2), and (3) with (4) bolts (10/24) and star lock nuts, if optional brass panel kit was purchased install at this time over the surround kit and than tighten the (4) bolts to secure all panels.
3. All brass trims (4), (5) and (6) are installed with 5/16 x 6/32 self tapping screws, attach part (4), (5) and (6) to outer edge of surround. Then place On/Off switch into slot (upper right corner) after right trim has been attached to surround. Route wires through 3/4” grommet hole, down right side of surround into right side of insert. A hole is provided in firebox, attach to valve at terminals TP and TP-TH (for SIT Valve). **(Refer to Wiring Diagram on Page** 26 **)**

Mountain View Hearth Products | manuals.stove-parts-unlimited.com

Replacement Parts List for Surround Kits and Panel Kits

Ref. No.	Std. Surround (27-3/4 x 40-1/2") Stock No.	Large Surround (30-3/4 x 44") Stock No.	Description
1	2000-401	2000-421	Top Panel
2	2000-402	2000-422	Left Panel
3	2000-404	2000-423	Right Panel
4	2000-405	2000-424	Brass Top Trim
5	2000-405	2000-425	Brass Left Trim
6	2000-406	2000-426	Brass Right Trim
7	2000-407	2000-427	Brass Top Panel
8	2000-408	2000-428	Brass Left Panel
9	2000-409	2000-429	Brass Right Panel
10	1000-216	1000-216	On/Off Switch
11	1000-243	1000-243	Wire 18-I/C (105 C)
12	Misc.	Misc.	Screws (10/24)
13	Misc.	Misc.	Nuts
14	Misc.	Misc.	Screws Self Tapping (5/16 x 6/32)
15	Misc.	Misc.	3/4" Grommet

16. TYPICAL VENTING DIAGRAM

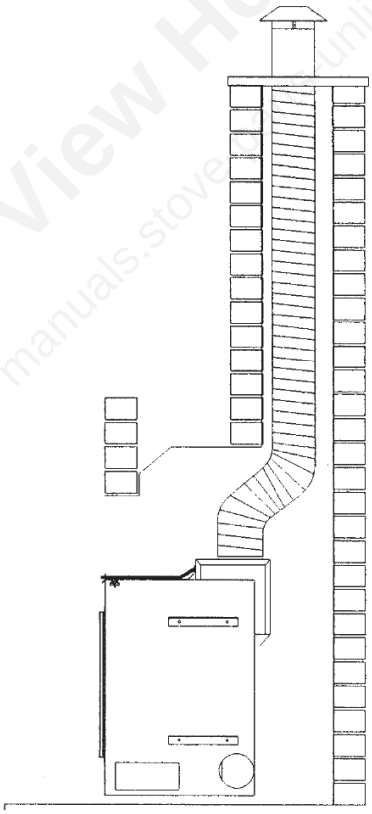

Mountain View Hearth Products
manuals.stove-parts-unlimited.com

Mountain View Hearth Products | manuals.stove-parts-unlimited.com

16. WIRING DIAGRAM - FOR SIT VALVE SYSTEM

For units with serial number greater than 13930, see 820639 - 820640 systems.

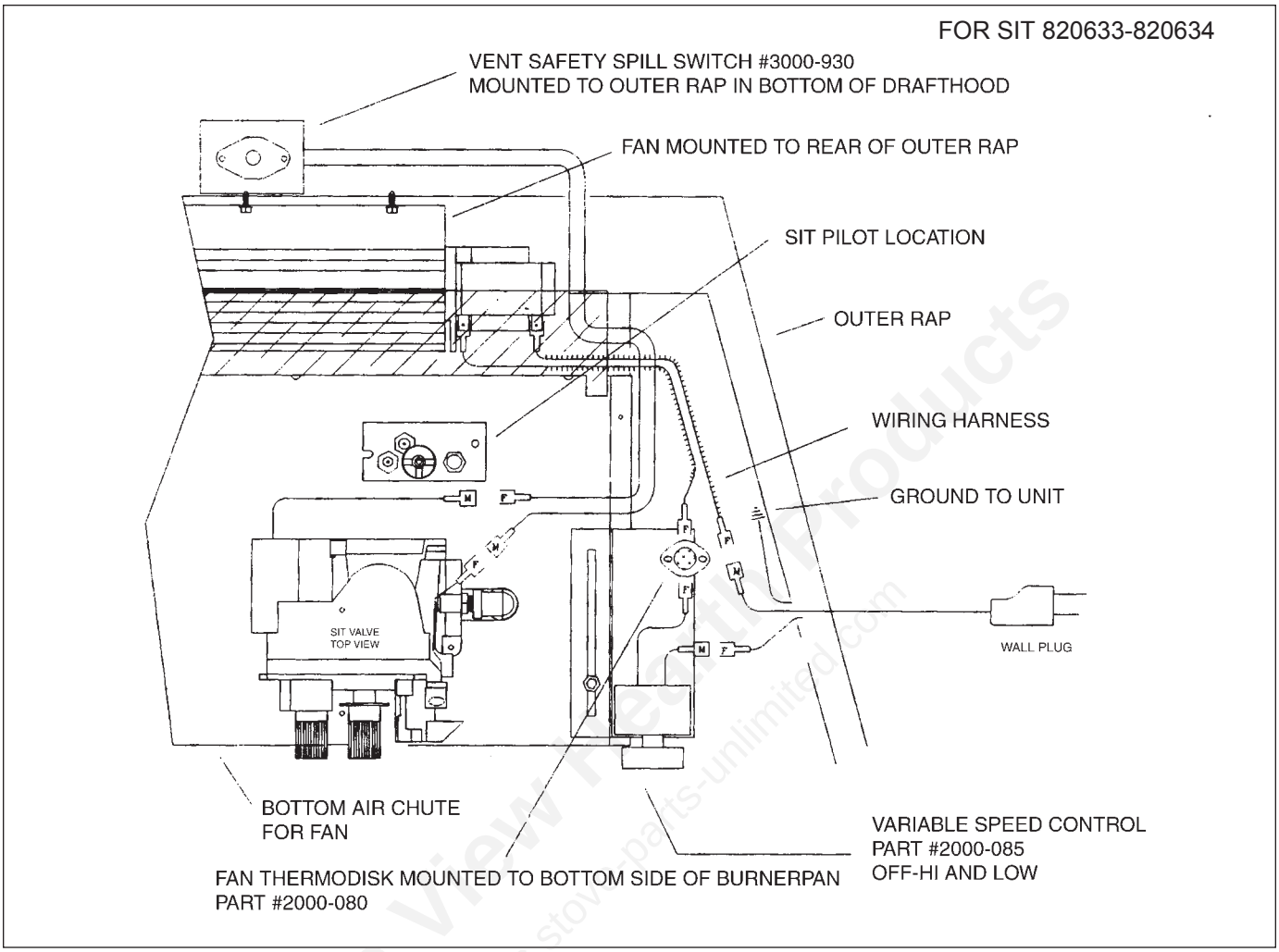

Wiring diagram SIT 820633-820634 thermocouple system

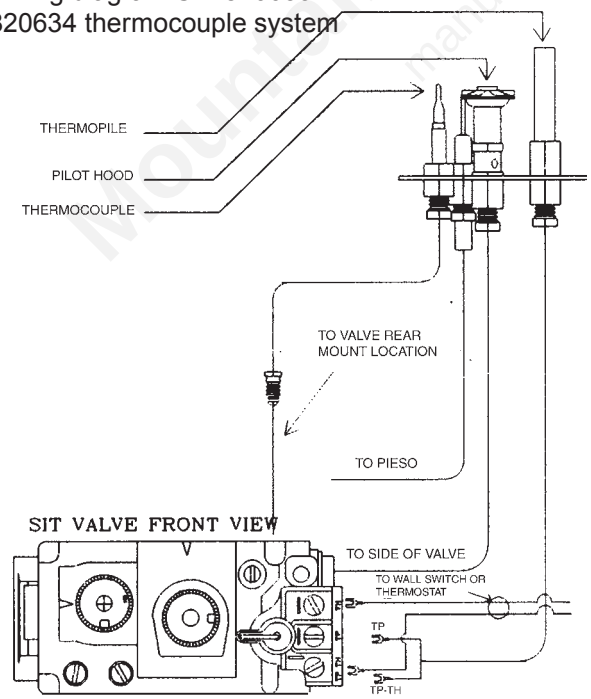

SIT 820633 - 820634 Valves

SPILL SAFETY SWITCH - Wiring Diagram

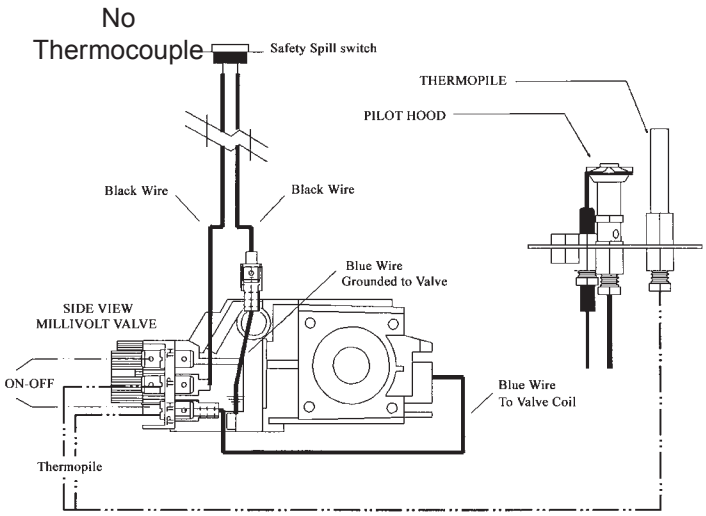

SIT 820-639 and 820-640 True Millivolt Systems
This System does not have a thermocouple

Mountain View Hearth Products | manuals.stove-parts-unlimited.com

17. WIRING DIAGRAM FOR ROBERT SHAW VALVE SYSTEM

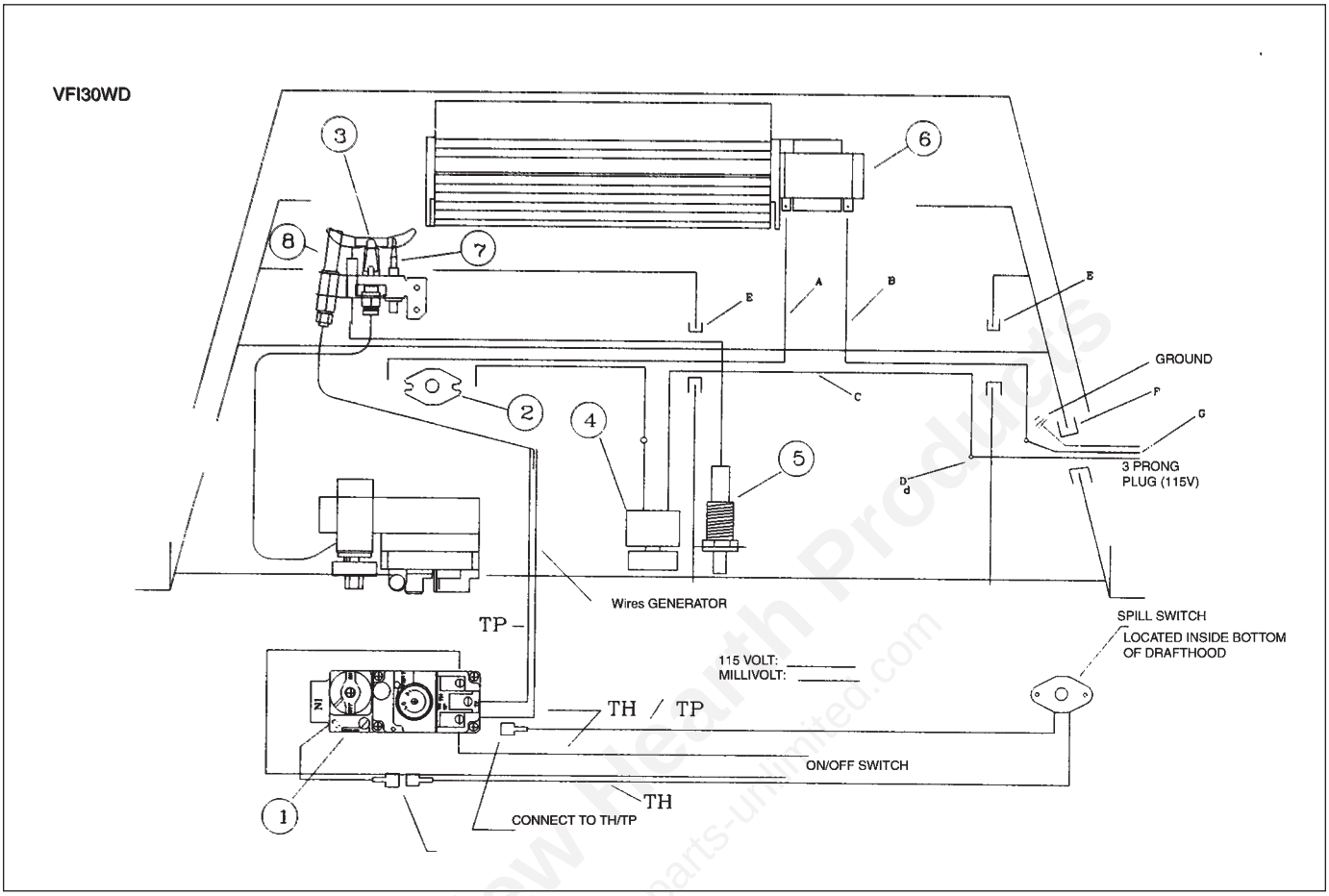

Ref. No	Stock No.	Description	Ref. Letter	Wire Description
1	2000-083	*Valve NO Hi/Lo (760 711 454)	A	(2) Female Slip on Insulated End
	2000-083P	*Valve LP Hi/Lo (760 711 454)		
2	2000-080	Thermostat (F095:105/127:113)	B	(1) Female Slip on Insulated End
3	1000-P134WR	Pilot & Bracket (E39AI)	C	(1) Female Slip on Insulated End
4	2000-085	Variable Speed Switch	D	(3) Twist Wire Connectors
5	1000-214	Piezo - Red Button	E	(2) Universal Bushings
6	2000-081	Blower Motor (QLN65/0024)	F	(1) Strain Relief Bushing
7	1000-P135WR	Thermocouple (H19E924)	G	(1) Cord 8ft, Three Prong 115 V
8	1000-P136WR	Generator (O01A-524)		
	1000-206	Orifice Pilot NG (F069-2060)		
	1000-P104WR	Orifice Pilot LP (FO69-2462)		
	1000-216	On/Off Rocker Switch		
	1000-255	Orifice Burner NG #43 Rear, #49 Front		
	1000-255	Orifice Burner LP #54 Rear, # 62 Front		

(* Valves are factory converted, specify (NG) Natural Gas, or (LP) Liquid Propane)

Mountain View Hearth Products | manuals.stove-parts-unlimited.com

18. ACCESSORY LIST

Stock Number	Description
Log Set: (Required for each Insert)	
LOGF5	Log Set - Four Piece Fibre Split Oak (F5000, ZDV6000, VF130)
LOGC5	Log Set - Four Piece Cast Split Oak (F5000, ZDV6000, VF130)
LOGC6	Log Set - Five Piece Cast Split Oak (6000 VFI30, VFI25) c/w Glowing Ember Rock Chunks
Surround Kit (Required for each Insert)	
V30S2640B	Surround Deluxe - Black
V30T2640A	Trim Kit - Antique Brass
V30T2640C	Trim Kit - Chrome
V30T2640P	Trim Kit - Polish Brass
	(Size 26 13/16" High x 40 3/4" Wide)
V30S2844B	Surround Large Deluxe - Black
V30T2844A	Trim Kit - Antique
V30T2844C	Trim Kit - Chrome
V30T2844P	Trim Kit - Polish Brass
	(Size 28 13/16" High x 44 3/4" Wide)
V30S2740B	Surround Kit - Black
V30T2740A	Trim Kit - Antique Brass
V30T2740C	Trim Kit - Chrome
V30T2740P	Trim Kit - Polish Brass
	(Size 27 3/4" High x 40 1/2" Wide)
V30S3044B	Surround Large Kit - Black
V30T3044A	Trim Kit - Antique Brass
V30T3044C	Trim Kit - Chrome
V30T3044P	Trim Kit - Polish Brass
	(Size 30 3/4" High x 44" Wide)
V2R2640	Riser for Deluxe Surround (2 1/2") - For Use on V30S2640B or V25S264 0B
V2R2840	Riser for Deluxe Large Surround (2 1/2") - For Use on V30S2844B
Grill Kit (Required for each Insert)	
Z6GBA	Grill Kit - Classic Builder Antique Brass
Z6GBC	Grill Kit - Classic Builder Chrome
Z6GBP	Grill Kit - Classic Builder Polish Brass
VI30GBL	Grill Kit - Black
VI30GAB	Grill Kit - Antique Brass
VI30GPB	Grill Kit - Polish Brass
Z6GCR	Grill Kit - Chrome

Bay Window Kits (Consists of Black Upper Grill and Brass Lower Grill, Three Piece Glass Viewing Area)

VI30BWAB	Bay Window (as above) with Antique Brass Louvers
VI30BWCR	Bay Window (as above) with Chrome Louvers
VI30BWPB	Bay Window (as above) with Polish Brass Louvers

Mountain View Hearth Products
manuals.stove-parts-unlimited.com

Mountain View Hearth Products | manuals.stove-parts-unlimited.com

Accessories – Optional

V30P2740A	Panel Kit - Antique Brass (For use on V30S2740B)
V30P2740C	Panel Kit - Chrome (For use on V30S2740B)
V30P2740P	Panel Kit - Polish Brass (For use on V30S2740B)
V30P3044A	Panel Large Kit - Antique Brass (For use on V30S3044A)
V30P3044C	Panel Large Kit - Chrome (For use on V30S3044C)
V30P3044P	Panel Large Kit - Polish Brass (For use on V30S3044P)
	(Note panel Kits are not available for Deluxe Surrounds)
V30ADDX	Arch Door Frame - Deluxe Black (352) V30ADTH
	Arch Door Frame - Top Half Black (353T)
V30ADDA	Arch Door Frame - Double Arch Black (354)
V30ADDD	Arch Door Frame - Double Door Arch Black (355)
V30ADBL	Arch Door Frame - Black (351)
VI30RL	Refractory Brick Liner (3Pce.)
ZIMT	Thermostat Millivolt Wall Mount
Z80PT	Thermostat Programmable Digital Millivolt Wall Mount (1F80-40)
DCHS	Remote Control Heatshield
GFRC	Remote Control Millivolt / IPI – On/Off
GTRC	Remote Control Millivolt – Thermostat
GTMRCN	Remote Control Millivolt – Thermostat/Modulating – NG
GTMRCP	Remote Control Millivolt – Thermostat/Modulating – LP

Venting Accessories

VI4SK25	Chimney Liner Starter Kit - (4" Diameter x 25')
	Kit Includes: Aluminum Liner 25ft, Chimney Flashing, Rain Cap, Mortar Collar, Screws
ZDV4FP8	Flex Pipe 4" Diameter (4' Unexpended to 8' Expanded)
ZDV4FP20	Flex Pipe 4" Diameter (10' Unexpended to 20' Expanded)
ZDV4FC	Flex Connector 4" Diameter

Mountain View Hearth Products
manuals.stove-parts-unlimited.com

Mountain View Hearth Products | manuals.stove-parts-unlimited.com

19. **REPLACEMENT PARTS FOR VFI30** SYSTEM #1 Old SIT System
(If Serial Number is LESS than 13436)
Valve System Parts - S.I.T.

Part Number	Description
1000-P136WR	Thermopile GOAI-524
1001-P035SI	Electrode Sparker 915.035 SIT
1001-P129SI	Thermocouple 290.129 SIT unified
1001-P157SI	Orifice Pilot LP 977.157 SIT
1001-P159SI	Orifice Pilot NG 977.159 SIT
1001-P508SI	HT Cable 16
1001-P633SI	Valve Nova LP Hi/Lo 0820633
1001-P634SI	Valve Nova NG Hi/Lo 0820634
1001-P605SI	Pilot Burner LP 190.605 unified SIT
1001-P606SI	Pilot Burner NG 190.606 unified SIT

REPLACEMENT PARTS FOR VFI30 New Top convertible SIT System
(If Serial Number is BETWEEN than 13436 - 13930)
Valve System Parts - S.I.T.

Part Number	Description
1000-P136WR	Thermopile GOAI-524
1001-P069SI	Electrode Sparker 915.069 TC SIT
1001-P216SI	Thermocouple 290.216 TC SIT
1001-P165SI	Orifice Pilot NG 977.165 TC SIT
1001-P167SI	Orifice Pilot LP 977.167 TC SIT
1001-P508SI	HT Cable 16
1001-P633SI	Valve Nova LP Hi/Lo 0820633
1001-P634SI	Valve Nova NG Hi/Lo 0820634
1001-P713SI	Pilot Burner LP 199.713 TC SIT
1001-P714SI	Pilot Burner NG 199.714 TC SIT

REPLACEMENT PARTS FOR VFI30 SYSTEM #3 New SIT TC True Millivolt Vented only
(If Serial Number is equal to or GREATER than 13930)
Valve System Parts - S.I.T.

Part Number	Description
1000-P136WR	Thermopile GOAI-524
1001-P069SI	Electrode Sparker 915.069 TC SIT
1001-P165SI	Orifice Pilot NG 977.165 TC SIT
1001-P167SI	Orifice Pilot LP 977.167 TC SIT
1001-P639SI	Valve Nova LP Hi/Lo 0820639 True MV
1001-P640SI	Valve Nova NG Hi/Lo 0820640 True MV
1001-P745SI	Pilot Burner LP 199.745 TC TM
1001-P746SI	Pilot Burner NG 199.746 TC TM

Mountain View Hearth Products
manuals.stove-parts-unlimited.com

Mountain View Hearth Products | manuals.stove-parts-unlimited.com

Miscellaneous Parts

1000-EMBER	Glowing Ember and Slag Kit
1000-255-36	Orifice Burner NG (0 - 4500 ft)
1000-255-52	Orifice Burner LP (0 - 4500 ft)
1000-P5423WS	Flat Springs - Bay Window
2000-032F	Draft Hood (Assembly)
2000-079	Gasket for Flue
2000-082	Glass - Robax (Neoceram) - (28-1/4 x 13-1/4) w/ Black edging
2000-092	Manual - VFI30
2000-095	Thermalcord - for Door
2000-BLPSI	Burner Assembly (Liquid Propane) c/w Sit Valve
2000-BNGSI	Burner Assembly (Natural Gas) c/w Sit Valve
3000-930	Spill Safety Switch (36T21)
C30GEK	Grate & Ember Plate Kit for Field Conversion for C6 Log Set c/w Ember Plate & Grate Bar for VFI25,VFI30
FP15GC	Stainless Steel Gas Connector

Conversion Kit (SIT Valve only)

30VFI-CKLP	LP Conversion Kit
30VFI-CKNG	NG Conversion Kit

Mountain View Hearth Products
manuals.stove-parts-unlimited.com

Mountain View Hearth Products | manuals.stove-parts-unlimited.com

Millivolt System, Lighting, and Burner Control

FOR YOUR SAFETY READ BEFORE LIGHTING

WARNING: If you do not follow these instructions exactly, a fire or explosion may result causing property damage, personal injury or loss of life.

BEFORE LIGHTING

A This appliance has a pilot which must be lighted by hand. When lighting the pilot, follow these instructions exactly.

B Smell all around the appliance area for gas. Be sure to smell next to the floor because some gas is heavier than air and will settle on the floor.

WHAT TO DO IF YOU SMELL GAS

- Do not try to light an appliance.
- Do not touch any electrical switch; do not use any phone in your building.
- Immediately call your gas supplier from a neighbour's phone. Follow the gas supplier's instructions.
- If you cannot reach your gas supplier, call the fire department.

C Use only your hand to push or turn the gas control knob. Never use tools. If the knob will not push in or turn by hand, don't try to repair it. Call a qualified technician. Force or attempted repair may result in a fire or explosion.

D Do not use the appliance if any part has been under water. Immediately call a qualified service technician to inspect the appliance and to replace any part of the control system which has been under water.

LIGHTING INSTRUCTIONS

1. Stop! Read the safety information above this label.
2. Set the thermostat to lowest setting.
3. Turn off all electrical power to the appliance.
4. Locate valve under the burner assembly.
5. If the control knob is not already in the off position, i.e. the word "OFF" in the 9 o'clock position, then push in the gas control knob slightly and turn ↻ clockwise to "OFF". NOTE: Knob cannot be turned from "PILOT" to "OFF" unless knob is pushed in slightly. Do not use force.
6. Wait five [5] minutes to clear out any gas. If you then smell gas. STOP! Follow "B" in the safety information above on this label. If you don't smell gas then go to the next step.
7. Now push in the control knob slightly and turn ↺ counter-clockwise to the "PILOT" position.
8. Push in the control knob all the way and hold it. With the other hand push in the red igniter button until you hear a click. Now observe closely the pilot burner located on the rear center-left hand side of the main burner. If a flame has appeared then continue to depress the control knob for 20 seconds. If the flame did not appear then continue to depress the red igniter button every 5 seconds until a flame is established. NOTE: If after 30 seconds a flame has not yet been established then turn the control knob back to the off position and repeat steps 5, 6 & 7.
9. Once the pilot has been established hold the control knob in the depressed position for approximately 25 seconds before releasing. If the flame goes out then repeat steps 7 and 8.
   - If the knob does not pop up when released, stop and immediately call your service technician or gas supplier.
   - If the pilot will not stay lit after several tries, turn the gas control to "OFF" and call your service technician.
10. Now turn the control knob to the "ON" position. The burner will not light unless the wall switch thermostat or remote control is turned "ON" or in the case of the thermostat there is a call for heat.
11. Close the access door and turn all electrical power back to the appliance.
12. The pilot must be turned off when the unit is not in use.

TO TURN OFF THE APPLIANCE

1. Set the thermostat to lowest setting.
2. Turn off all electric power to the appliance if service is to be performed.
3. Open the control access door.
4. Push in the gas control knob slightly and turn ↻ clockwise to the "OFF" position. Do not force.
5. Replace control access panel.

NOTE: Only one on/off device (manual on/off, remote control, or hard wired thermostat) should be connected to the appliance at any one time, this is most important when installing an insert or stove as the on/off rocker switch is installed at the factory.

Recommended Maximum Lead Length (Double Wire)
When Using Wall Switch or Thermostat

Wire Size	Max. Length
14ga	100ft [30.4m]
16ga	64ft [19.5m]
18ga	40ft [12.1m]
20ga	25ft [7.6m]
22ga	15ft [4.5m]

CAUTION: DO NOT WIRE 120V POWER TO MILLIVOLT SWITCHES OR THERMOSTAT.

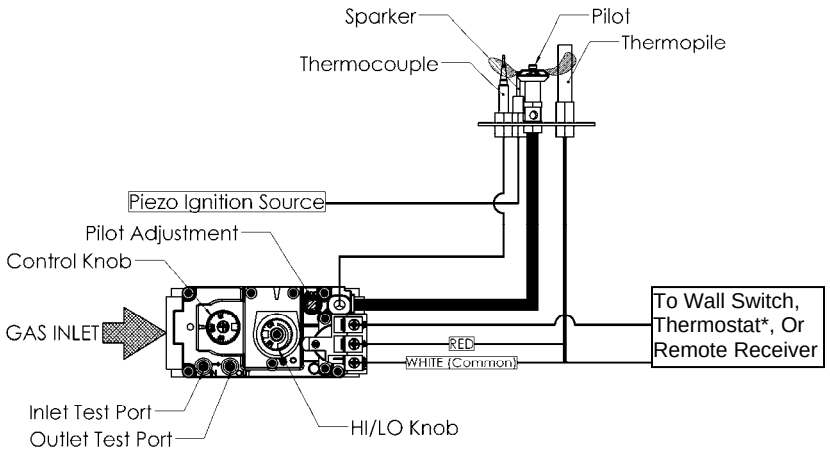

*In the U.S.A. Thermostats are not permitted for Vented Gas Fireplaces (ANSI Z21.50b-2009 -Decorative).

Mountain View Hearth Products | manuals.stove-parts-unlimited.com

-Glass Safety- All Units

IT IS THE RESPONSIBILITY OF THE HOME OWNER TO ENSURE THAT NO ONE TOUCHES A HOT APPLIANCE. Optional safety screens are available for most appliances. Check with your dealer to find out if one is available for your unit, or if an aftermarket free standing safety screen is available.

- Children and adults should be alerted to the hazards of the high surface temperatures of this appliance and should stay away to avoid burns or ignition of clothing.
- Do not clean when the glass is hot.
- Young children should be carefully supervised when they are in the same room as the appliance. Toddlers, young children and others may be susceptible to accidental contact burns.
- A physical barrier is recommended if there are at risk individuals in the house. To restrict access to a fireplace or stove, install an adjustable safety gate to keep toddlers, young children and other at risk individuals out of the room and away from hot surfaces.
- Do not leave the fireplace remote control where it is accessible to children.

Mountain View Hearth Products
manuals.stove-parts-unlimited.com

KINGSMAN FIREPLACES Est. 1976

Mountain View Hearth Products | manuals.stove-parts-unlimited.com

LIMITED LIFETIME WARRANTY

This Limited Lifetime Warranty applies only while the unit remains at the site of the original installation and only if the unit is installed inside the continental United States, Alaska, Hawaii, and Canada. The warranty applies only if the unit is installed and operated in accordance with the printed instructions and in compliance with applicable installation and building codes and good trade practices.

BASIC ONE YEAR WARRANTY

During the first year after installation, we will provide a replacement for any component part of your unit found to be defective in materials or workmanship, including labour costs. Repair work requires prior approval by Kingsman, labour costs are based on a predetermined rate schedule and any repair work must be done through an authorized Kingsman dealer.
(Excluded Components: Accent Light Bulbs, Gasketing and Paint)

LIMITED LIFETIME WARRANTY

The heat exchanger, combustion chamber and burner of every Kingsman product excluding the Outdoor Firepit are warranted against materials or workmanship during the period the product is owned by the original owner. The part to be replaced must be returned to our distributor in exchange for the replacement part. Any labor, material, freight and/or handling charges associated with any repair or replacement pursuant to this Limited Lifetime Warranty will not be covered by this warranty.

GENERAL TERMS

In lieu of providing a replacement part, we may, at our option, provide the distributor's component purchase price from us or a credit equal to the distributor's component purchase price from us toward the purchase of any new unit which we distribute. If a credit is given in lieu of a replacement part, the rating plate from the unit being replaced must be submitted on a warranty claim, and the unit being replaced must be made available to our distributor for disposition.

In establishing the date of installation for any purpose, including determination of the starting date for the term of this Limited Lifetime Warranty, reasonable proof of the original installation date must be presented*, otherwise the effective date will be based upon the date of manufacture plus thirty (30) days.

We will not be responsible for and you, the user, will pay for: (a) damages caused by accident, abuse, negligence, misuse, riot, fire, flood, or Acts of God (b) damages caused by operating the unit where there is a corrosive atmosphere containing chlorine, fluorine, or any other damaging chemicals (other than in a normal residential environment) (c) damages caused by any unauthorized alteration or repair of the unit affecting its stability or performance (d) damages caused by improper matching or application of the unit or the unit's components (e) damages caused by failing to provide proper maintenance and service to the unit (f) any expenses incurred for erecting, disconnecting or dismantling the unit (g) parts or supplies used in connection with service or maintenance (h) damage repairs, inoperation or inefficiency resulting from faulty installation or application (i) electricity or fuel costs or any increase in electricity or fuel cost whatsoever including additional or unusual use of supplemental electric heat.

We shall not be liable for any incidental, consequential, or special damages or expenses in connection with any use or failure of this unit. We have not made and do not make any representation or warranty of fitness for a particular use or purpose, and there is no implied condition of fitness for a particular use or purpose. We make no express warranties except as stated in this Limited Lifetime Warranty. No one is authorized to change this Limited Lifetime Warranty or to create for us any other obligation or liability in connections with this unit. Any implied warranties shall last for one year after the original installation. Some states and provinces do not allow the exclusion or limitation of incidental or consequential damages or do not allow limitations on how long an implied warranty or condition lasts, so the above limitations or exclusions may not apply to you. The provisions of this limited warranty are in additions to and not a modification of or subtraction from any statutory warranties and other rights and remedies provided by law.

Save this certificate. It gives you specific legal rights, and you may also have other rights which may vary from state to state and province to province.

In the event your unit needs servicing, contact your dealer or contractor who installed or serviced your unit. When requesting service, please have the model and serial number from each unit readily available. If your dealer needs assistance, the distributor is available for support and we, in turn support the distributor's efforts.

Fill in the installation date and model and serial numbers of the unit in the space provided below and retain this limited warranty for your files.

Model No. _____ **Serial No.** _____ **Date installed** _____

Dealer or Contractor Name: _____

*To receive advantage of your warranty, you must retain the original records that can establish the installation date of your unit.

The Ultimate in Design, Engineering & Quality

Mountain View Hearth Products | manuals.stove-parts-unlimited.com