Mountain View Hearth Products | manuals.stove-parts-unlimited.com

REVISIONS			
REV	DESCRIPTION	BY	DATE
N/C	NEW RELEASE	KM	5/3/96

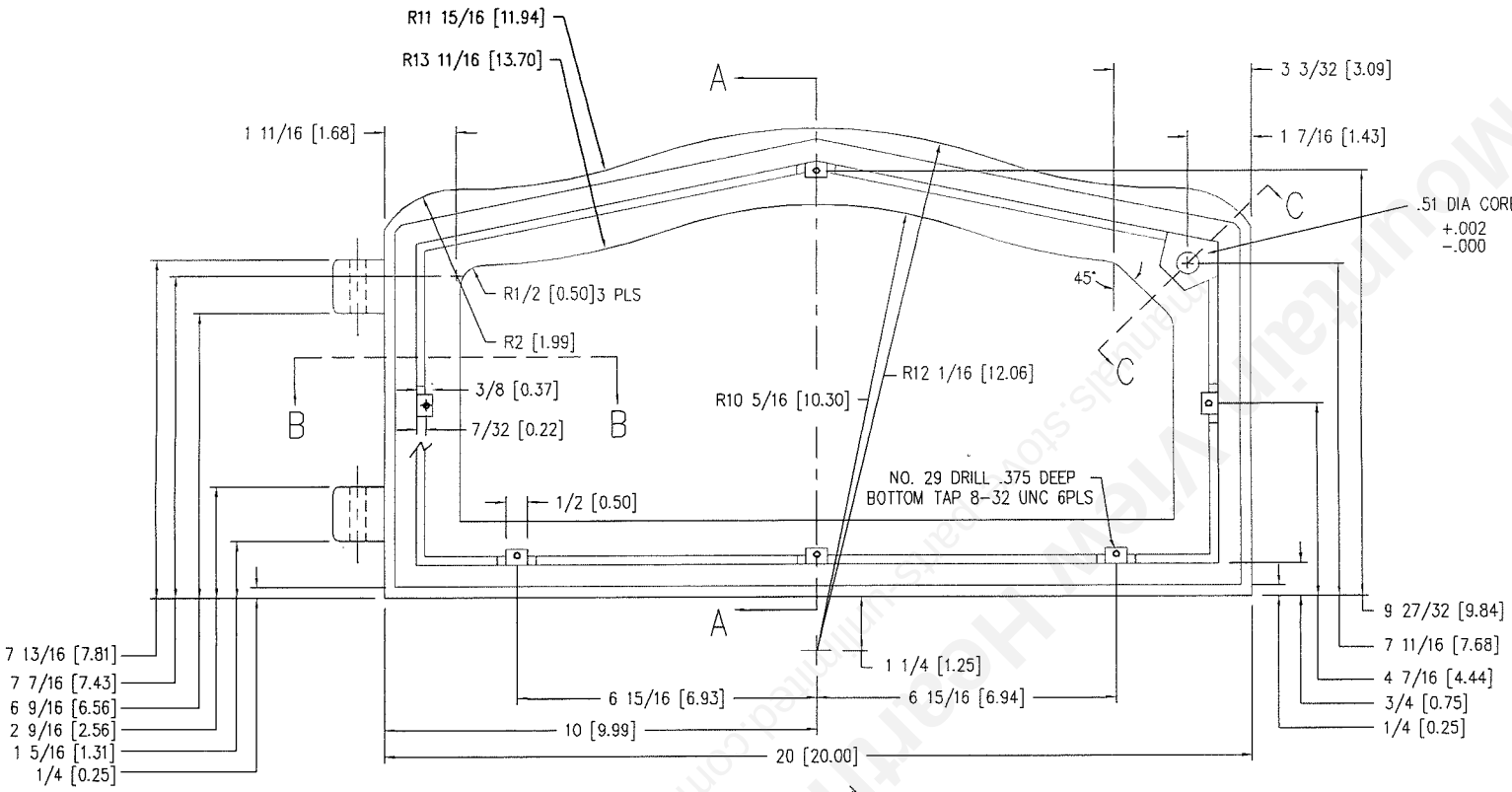

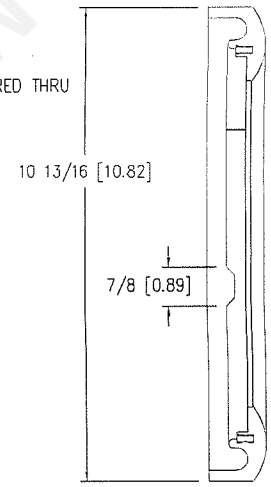

SECTION A–A

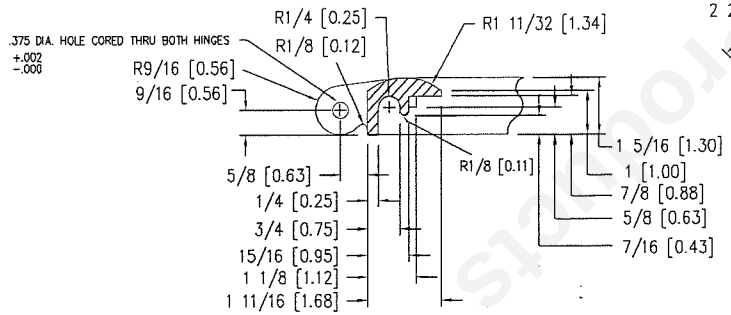

SECTION B–B

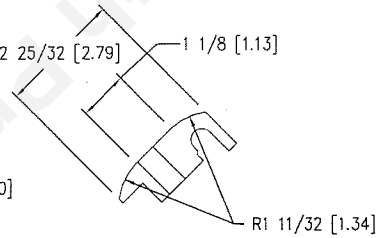

SECTION C–C

NOTE:
1. BLEND HINGES INTO DOOR RAD.
2. BLEND ALL RAD. THAT INTERSECT
3. ALL FILLETS AND ROUNDS .12 RAD.
4. DRAFT ANGLES 2°

PP–43 = BRASS WT. 15.8 LBS.
PP–44 = CAST WT. 16.2 LBS.

USED ON			MATERIAL: CAST-IRON BRASS-421-ALLOY	Country Flame	1200 Industrial park Mt. Vernon Mo. 65712
MODEL	NEXT ASSY.	QTY	SHEAR SIZE: NA	TITLE SMALL-DOOR (SD1)	PP-43
02	–	–	PREP. KYMCCOY 5/3/96		
G-200			APPD	DWG NO. PP–43 PP–44	REV. NC
			SHEET 1 OF 1		

Mountain View Hearth Products