REV	ECN	DESCRIPTION	DATE	BY
		RELEASED		

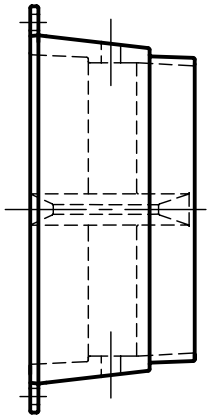

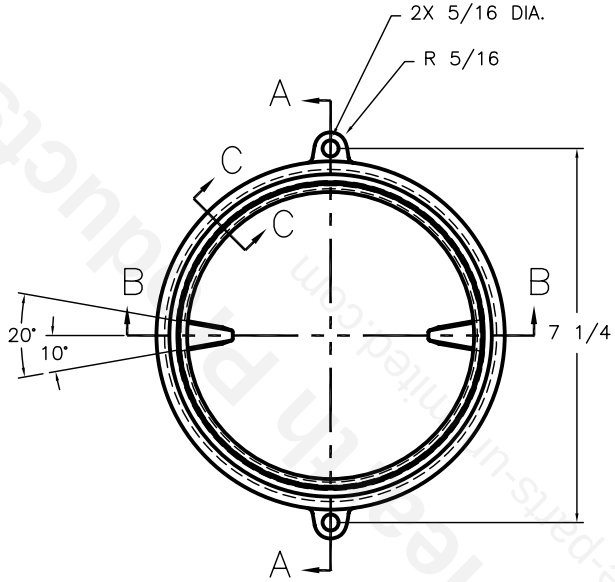

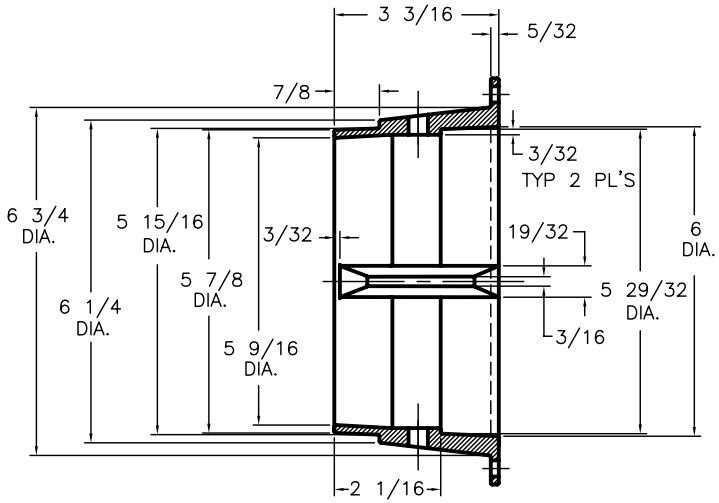

SECTION A–A

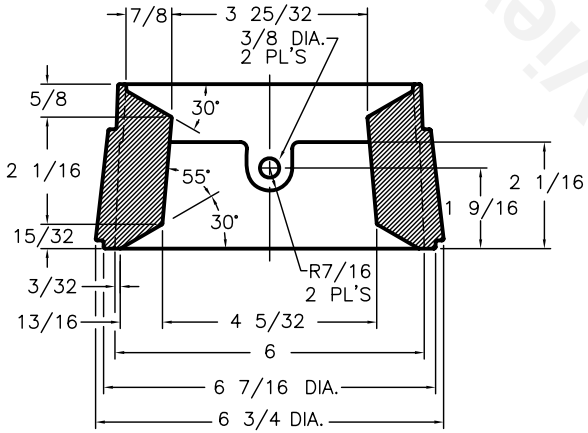

SECTION B–B

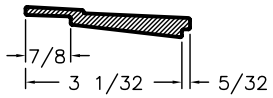

SECTION C–C

NOTE:
FILLETS & ROUNDS 1/32 R.
DRAFT ANGLES 2°
UNLESS OTHERWISE SPECIFIED

TOLERANCES EXEPT AS NOTED	HOLES ±	MATERIAL CAST IRON	SCALE 1/4	SIZE A	REV	UNITED STATES STOVE COMPANY ESTABLISHED 1869
	FRACTIONAL ±	FINISH BLACK HI–TEMP PAINT	DWN BY WA	TITLE FLUE COLLAR		NUMBER 40309
	ANGULAR ±	REFERENCE 1261, 2421	DATE 1–6–95			

Mountain View Health Products | manuals.stove-parts-unlimited.com